Quick Start guide
Tania kit
Rev 0.9

Mas Elettronica Sas
Via Rossi 1
35030 Rubano (PD)
Italy.

Revision History..

Rev.	Document Code	Released	Written	Verified	Approved
0.9	**QuickStart Guide Tania kit**	17/07/2017	Destro Marco	16/02/2017	Orsaria Paolo

Contents

Index

Introduction

The development kit is equipped with **Tania** carrier and a **Leila** Cpu card with iMX6DL processor. Tania board includes the following pheriperals : debug serial, RS485 communication, I2C+Gpios, HDMI, USB , LVDS,Gigabit Ethernet, uSD, eMMC of 4GB. From software point of view, the kit is equipped with uboot bootloader, toolchains, BSP (kernel), rootfs obtained with yocto embedded environment. Both the software suite and hardware have been entirely developed by MAS-Elettronica.

System view

Figure 1: Tania-kit top view

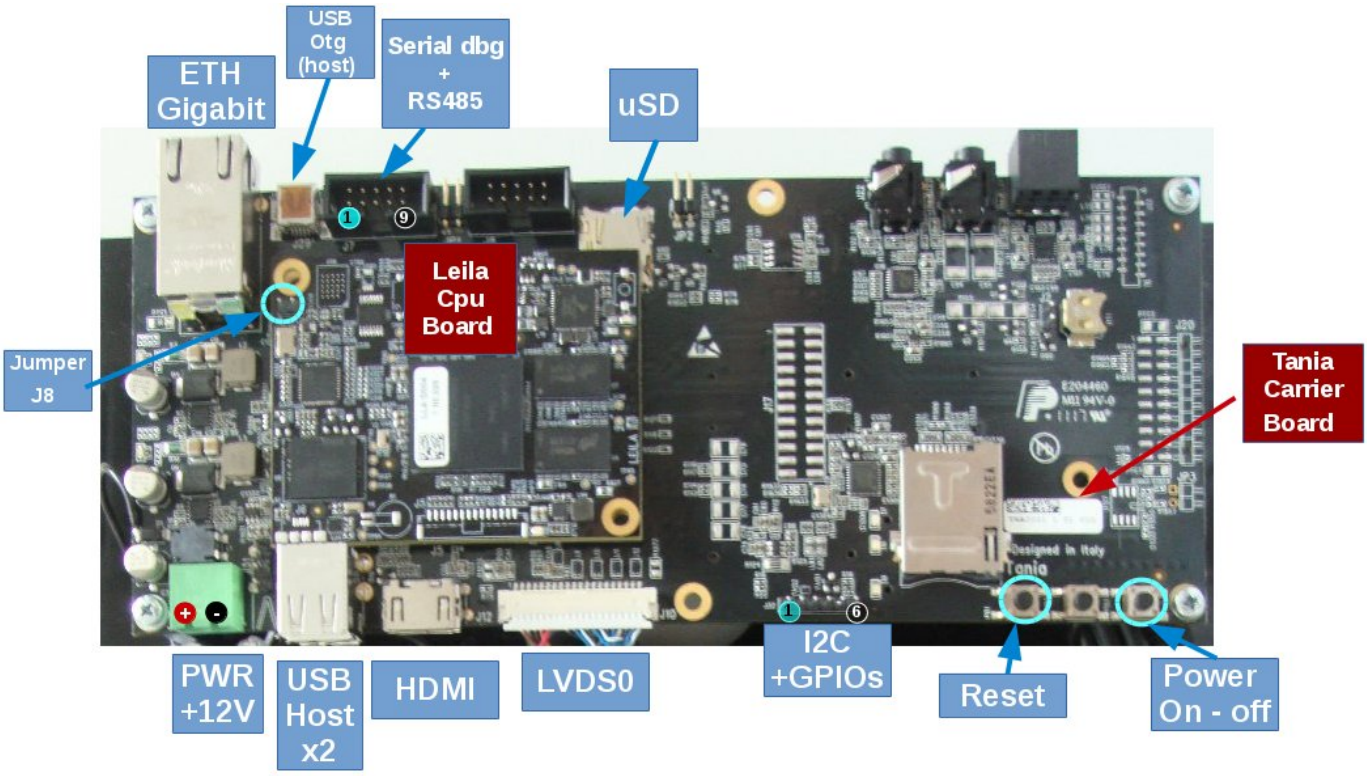

Figure 2: Tania-kit overview

Software

Toolchain

As toolchain , is recommend the following: `gcc-linaro-4.9-2015.05-x86_64_arm-linux-gnueabihf.` Both for Uboot and kernel.

U-boot

U-boot is open-source software, whose main reference is https://www.denx.de/wiki/U-Boot/Documentation. It is often identified as the second-stage bootloader. Uboot provides a powerful and essential shell-based interface (shell line) of Hush shells, with a C-like syntax. It consists of a set of commands and a set of environment variables. The main purpose, but not unique, is to be able to define boot sources and boot modes by using scripts defined as commands and variables combinations. Of course, MAS has developed a custom ones.

In order to obtain a bootable **uSD** , follow steps below

```
$ make O=../build-dir/ mx6dltania_defconfig
$ make O=../build-dir/ -j8
```

the above step produce the file **u-boot.imx.sd** on build directory.

In order to obtain a bootable **eMMC** , follow steps below

```
$ make O=../build-md-nobk/ mx6dltania_emmc_defconfig
$ make O=../build-md-nobk/ -j8
```

the above step produce the file **u-boot.imx.emmc** on build directory.

Release Version

```
U-Boot 2015.04 TNA00011 v1.1 8d3eb7f (Jul 10 2017 – 17:45:49)
```

Create a bootable uSD
from a common pc (assumed it is linux based)

```
:~$ sudo fdisk /dev/sde
Welcome to fdisk (util-linux 2.27.1).
Changes will remain in memory only, until you decide to write them.
Be careful before using the write command.
Device does not contain a recognized partition table.
Created a new DOS disklabel with disk identifier 0xdf12a6f7.
Comando (m per richiamare la guida): o
Created a new DOS disklabel with disk identifier 0x28e16a84.
Comando (m per richiamare la guida): w
The partition table has been altered.
Calling ioctl() to re-read partition table.
Syncing disks.
dmarco@pc-fabio:~$ sudo fdisk /dev/sde
Welcome to fdisk (util-linux 2.27.1).
Changes will remain in memory only, until you decide to write them.
Be careful before using the write command.
Comando (m per richiamare la guida): n
Partition type
  p   primary (0 primary, 0 extended, 4 free)
  e   extended (container for logical partitions)
Select (default p):
Using default response p.
Numero della partizione (1-4, default 1): 1
First sector (2048-15564799, default 2048): 50000
Last sector, +sectors or +size{K,M,G,T,P} (50000-15564799, default 15564799):
Created a new partition 1 of type 'Linux' and of size 7,4 GiB.
Comando (m per richiamare la guida): w
The partition table has been altered.
Calling ioctl() to re-read partition table.
Syncing disks.
```

The steps above leads to

```
Disk /dev/sde: 7,4 GiB, 7969177600 bytes, 15564800 sectors
Units: sectors of 1 * 512 = 512 bytes
Sector size (logical/physical): 512 bytes / 512 bytes
I/O size (minimum/optimal): 512 bytes / 512 bytes
Disklabel type: dos
Disk identifier: 0x28e16a84
```

```
Dispositivo Avvio Start     Fine  Settori  Size Id Tipo
/dev/sde1         50000 15564799 15514800  7,4G 83 Linux
```

sudo dd if=u-boot.imx.sd of=/dev/sde bs=512 seek=2 conv=fsync

kernel compile

In embedded systems, a board support package (BSP) is the layer of software containing hardware-specific drivers and other routines that allow a particular operating system to function in a particular hardware environment (a computer or CPU card). MAS-Elettronica has developed a custom one. The following istructions generates the binary files that represents the BSP.

```
$ make O=../build-dir/ tna0001_defconfig
$ make O=../build-dir/ uImage -j8 LOADADDR=0x10008000
$ make O=../build-dir/ imx6dl-tna0001.dtb
```

The build product are 2 files: uImage e imx6dl-tna0001.dtb.

Release version

```
Linux version 4.1.15 TNA00011 v1.10 549ecc6
```

kit Power up

Boot mode

There are 2 way to bootstrap the system.

- from SD. Put a jumper on J8 of Leila board. Put a uSD formatted ad shown above. then power up the system
- from eMMC. Remove jumper on J8 of Leila board.

Put the serial cable on J7 as shown on "Debug port section".

Power supply

Power supply is **+12V** on J1.The leds D5 e D2 turn on. Led D5 turn on on Leila.

Uboot messages

Once system is powered, the following messages appears on console

```
U-Boot 2015.04 TNA00011 v1.1 8d3eb7f (Jul 10 2017 - 17:45:49)
CPU:   Freescale i.MX6DL rev1.3 at 792 MHz
CPU:   Temperature 39 C
Reset cause: POR
Board: TANIA
I2C:   ready
DRAM:  1 GiB
```

```
Found PFUZE100 deviceid=10,revid=21
MMC:   FSL_SDHC: 0, FSL_SDHC: 1
unsupported panel tania
In:    serial
Out:   serial
Err:   serial
check_and_clean: reg 0, flag_set 0
Fastboot: Normal
flash target is MMC:0
Bad partition index:2 for partition:recovery
Bad partition index:5 for partition:system
Bad partition index:4 for partition:data
Net:   ...... KSZ9031 (0x1622)
FEC [PRIME]
Normal Boot
Hit any key to stop autoboot:  0
Tania-kit#
Tania-kit#
```

bootenv

to show the boot environment variables

```
Tania-kit# printenv
addadroid=setenv bootargs ${bootargs} androidboot.console=ttymxc0
androidboot.selinux=disabled androidboot.dm_verity=disabled init=/init
addcons=setenv bootargs ${bootargs} console=${console},${baudrate} ${mtdparts}
addhdmi=video=mxcfb0:dev=hdmi,1920x1080M@60,if=RGB24,bpp=32
addip=setenv bootargs ${bootargs} ip=${ipaddr}:${nfsserverip}:${gatewayip}:$
{netmask}:${hostname}:${ethdev}:off:${gatewayip}:${dnsip}
addip_sd=setenv bootargs ${bootargs} ip_sd=${ipaddr}:${nfsserverip}:$
{gatewayip}:${netmask}:${hostname}:${ethdev}:off:${gatewayip}:${dnsip}
addlvds0=video=mxcfb0:dev=ldb,LDB-WXGA,if=RGB666,bpp=18
addlvds1=video=mxcfb1:dev=ldb,LDB-WXGA,if=RGB24,bpp=24
addlvds_dual=${addlvds0},ldb=sep0 ${addlvds1},ldb=sep1
addvideo=setenv bootargs ${bootargs} ${addhdmi} fbmem=28M consoleblank=0
vmalloc=400M cma=384M
baudrate=115200n8
bootargs=root=/dev/nfs rw
nfsroot=192.168.200.199:/home/shared/rfs/tania/TNA00011/rfs_yct_fsl_x11_qt5_open
nsh,v3,tcp
ip=192.168.200.173:192.168.200.199:192.168.200.254:255.255.255.0:tania::off:192.
168.200.254:192.168.200.254 console=ttymxc3,115200n8 video=mxcfb0:dev=ldb,LDB-
WXGA,if=RGB666,bpp=18 fbmem=28M consoleblank=0 vmalloc=400M cma=384M
bootcmd=run net_nfs_dts
bootcmd_mfg=run mfgtool_args;bootz ${loadaddr} ${initrd_addr} ${fdt_addr};
bootdelay=1
bootfile=uImage.md
console=ttymxc3
dnsip=192.168.200.254
ethact=FEC
ethaddr=00:01:02:03:04:81
ethprime=FEC
fastboot_dev=mmc0
fdt_addr=0x18000000
```

```
fdt_high=0xffffffff
fdtfile=imx6dl-tna0001.dtb.md
fileaddr=12000000
filesize=670fb8
gatewayip=192.168.200.254
hostname=tania
initrd_addr=0x12C00000
initrd_high=0xffffffff
ipaddr=192.168.200.173
loadaddr=0x12000000
loadfdt_mmc=ext2load mmc 0:${mmcdev} ${fdt_addr} boot/${fdtfile}
loadfdt_net=tftp ${fdt_addr} ${serverip}:${system}/${fdtfile}
loadk_mmc=ext2load mmc 0:${mmcdev} ${loadaddr} boot/${bootfile}
loadk_net=tftp ${loadaddr} ${serverip}:${system}/${bootfile}
loadub_mmc=ext2load mmc 0:${mmcdev} ${loadaddr} boot/${ubfile}
loadub_net=tftp ${loadaddr} ${serverip}:${system}/${ubfile}
mfgtool_args=setenv bootargs console=ttymxc3,115200 rdinit=/linuxrc
g_mass_storage.stall=0 g_mass_storage.removable=1 g_mass_storage.idVendor=0x066F
g_mass_storage.idProduct=0x37FF g_mass_storage.iSerialNumber=""
enable_wait_mode=off
mmc_net=run nfsargs addip addcons loadk_mmc; bootm
mmc_net_dts=run nfsargs addip addcons addvideo loadk_mmc loadfdt_mmc; bootm $
{loadaddr} - ${fdt_addr}
mmc_sd=run mmcargs addcons loadk_mmc; bootm
mmc_sd_dts=run mmcargs addcons addvideo loadk_mmc loadfdt_mmc; bootm ${loadaddr}
- ${fdt_addr}
mmcargs=setenv bootargs root=${mmcroot} rootwait rootdelay=1
mmcdev=1
mmcroot=/dev/mmcblk0p1 rw
net_mmc=run mmcargs addcons addadroid addvideo loadk_net loadfdt_net; bootm $
{loadaddr} - ${fdt_addr}
net_nfs=run nfsargs addip addcons addvideo loadk_net; bootm
net_nfs_dts=run nfsargs addip addcons addvideo loadk_net loadfdt_net; bootm $
{loadaddr} - ${fdt_addr}
netmask=255.255.255.0
nfsargs=setenv bootargs root=/dev/nfs rw nfsroot=${nfsserverip}:$
{nfsroot},v3,tcp
nfsroot=/home/home_nfs/shared/rfs/tania/TNA00011/rfs_yct_fsl_x11_qt5_opennsh
nfsserverip=192.168.200.198
panel=tania
serverip=192.168.200.234
system=tania/tna0001
ubfile=u-boot.imx.emmc
update_emmc_mmc=run zero_mm2 loadub_mmc update_sub
update_emmc_net=run zero_mm2 loadub_net update_sub
update_sub=if mmc dev ${mmcdev} ; then mmc write ${loadaddr} 0x2 0x350 ; fi
zero_mm=mw.l ${fdt_addr} 0 0x100000
zero_mm2=mw.l ${loadaddr} 0 0x800000

Environment size: 3572/8188 bytes
```

Take a closer look to **net_nfs_dts**

net_nfs_dts=run nfsargs addip addcons loadk_net loadfdt_net; bootm ${loadaddr} - ${fdtaddr}
this commands allow kernel load from tftp, loads rootfs from network filesystem.

nfsargs=setenv bootargs root=/dev/nfs nfsroot=${serverip}:${nfsroot},v3,tcp
setenv is a uboot shell command.
bootargs is a "key-word" that host uboot variables to pass at kernel command lines.
serverip=192.168.250.1. ip address of nfs server.
nfsroot=/path/to/your/rootfs. path on host machine that host the rootfs (and NFS server).
addip=setenv bootargs ${bootargs} ip_sd=${ipaddr}:${serverip}:${gatewayip}:${netmask}:${hostname}:${ethdev}:off:${gatewayip}:${serverip}
addcons=setenv bootargs ${bootargs} console=${console},${baudrate} ${mtdparts} loglevel=8
define serial console, speed and so on. Also define verbose level messages for kernel: 8 is max allowed.
loadk_net=**tftp** ${loadaddr} ${serverip_tftp}:${system}/${bootfile}
tftp is command of uboot shell. it loads at RAM address loadaddr=0x42000000 the bootfile= uImage via tftp. system is a relative path of tftp server on hosts.
loadfdt_net=tftp ${fdtaddr} ${serverip_tftp}:${system}/${fdtfile}
same as before. it loads at RAM address fdtaddr=0x41000000 il fdtfile= xxxx.dtb tramite tftp. system is a relative path of tftp server on hosts. utente@host:/home/shared/tftpboot/customer$
bootm ${loadaddr} - ${fdtaddr}
bootm is command of uboot shell. it starts the bootstrap.

Once the bootenv has been set properly, let linux start

```
Tania-kit# run net_nfs_dts
```

BSP

Debug Port

The debug port is the first thing you can get in touch of the kit.. Mapped as **/dev/ttymxc3** from kernel. Baud rate: **115200** . 8bit no parity. In order to get messages from debug console , plug the cable provided on J7.

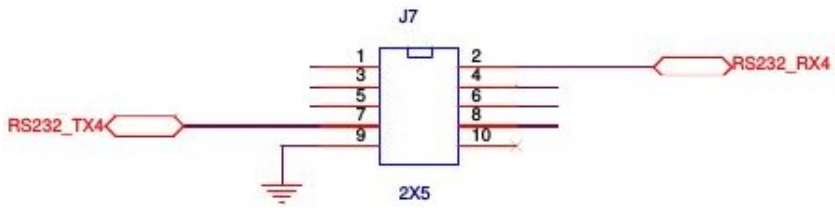

Figure3 : Pinout debug port

In order to connect it to your pc, MAS-elettronica recomends to use **USB-COM232-PLUS-2 - Adapter Board, FTDI Chip, USB to Dual Channel RS232**.

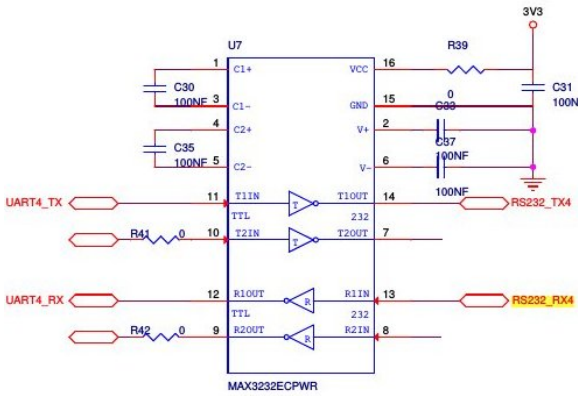

Figure4: 2-wire uart4 interface

Comunication with your PC could be settled up with a program like **GTKterm** as shown in figure or **PUTTY**. Suitable cable is provided with the kit.

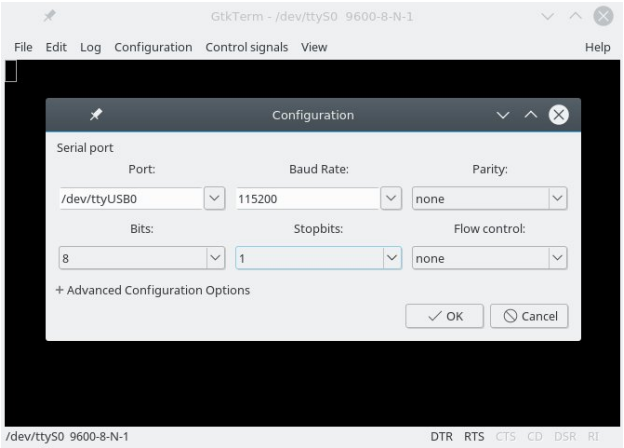

Figure5: GTKterm conf

RS485

Mapped as **/dev/ttymxc1**. Baud rate: **115200** or slower. You can send messages or receive messages by doing the following operations

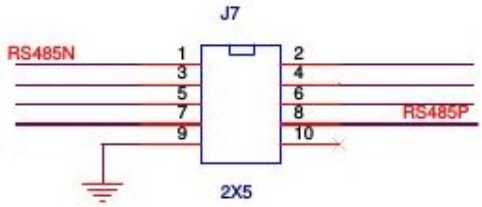

Figure6 RS485 pinout port

Address the device with

```
# echo "messages" > /dev/ttymxc1
# cat /dev/ttymxc1
```

there's no needs to drive "manually" the RTS. It was embedded at kernel level.

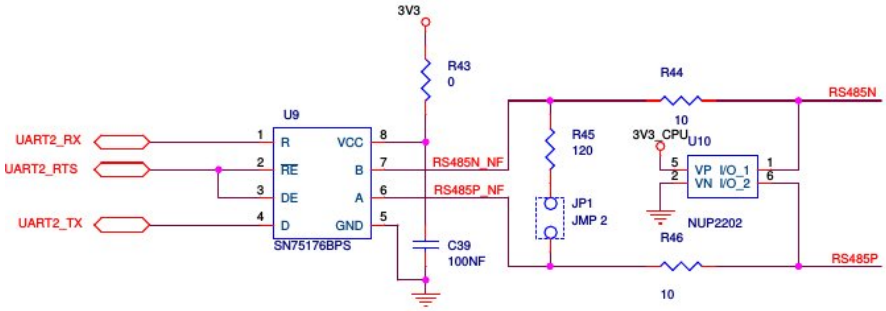

Figure7 RS485 Physical interface

In order to get messages from the RS485 interface, MAS-elettronica recomends to use "FTDI RS485 - USB converter". As an exmaple the comunication with your PC could be settled up with a program like GTKterm as shown in figure above.

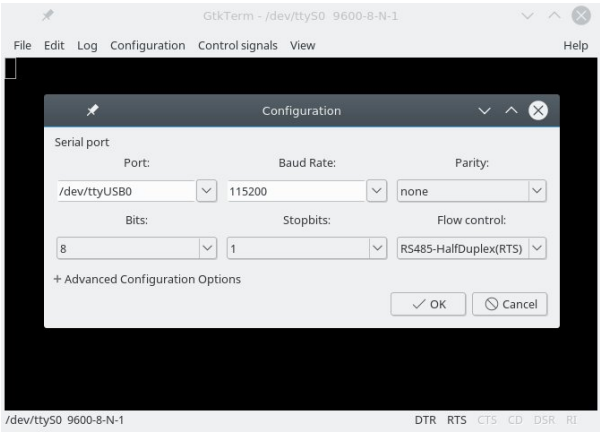

Figure8 GTKterm configuration

LVDS

The display provided with the kit is connected to this interface. J10 Connector.

In order to use this video interface as output, some bootenv must be modified:
set **addlvds0** on **addvideo** as shown in the following snippet

```
Tania-kit# editenv addvideo
edit: setenv bootargs ${bootargs} ${addlvds0} fbmem=28M consoleblank=0
vmalloc=400M cma=384M
Tania-kit# save
Saving Environment to MMC...
Writing to MMC(0)... done
```

kernel drives the video interface by mappings its framebuffer on the pheriperal. So, if the system is booting properly, two penguins will appears on the display.

HDMI

IJ12 connector. In order to use this video interface as output, some bootenv must be modified:
set **addhdmi** on **addvideo** as shown in the following snippet

```
Tania-kit# editenv addhdmi
edit: video=mxcfb0:dev=hdmi,1920x1080M@60,if=RGB24,bpp=32
Tania-kit# editenv addvideo
edit: setenv bootargs ${bootargs} ${addhdmi} fbmem=28M consoleblank=0
vmalloc=400M cma=384M
Tania-kit# save
Saving Environment to MMC...
Writing to MMC(0)... done
```

kernel drives the video interface by mappings its framebuffer on the pheriperal. A comomn monitor could be used as video device. So, if the system is booting properly, two penguins will appears on the monitor.

USB

HOSTs (Touchscreen)

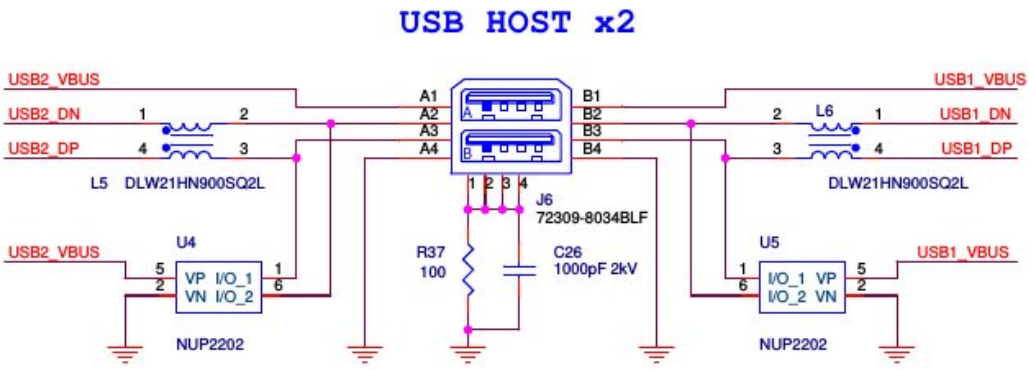

Figure9: USB Hosts port

both port works as host, so you can use them to put usb, key or the touchscreen provided in the kit.

kernel self recognized the touchscreen when plugged in. As shown in the following snippet

```
root@tna00011:~# [  654.354123] usb 2-1.1: new full-speed USB device number 3 using
ci_hdrc
[  654.518918] input: eGalax Inc. eGalaxTouch EXC3000-0337-44.00.00 as
/devices/soc0/soc/2100000.aips-bus/2184200.usb/ci_hdrc.1/usb2/2-1/2-1.1/2-
1.1:1.0/0003:0EEF:C000.0001/input/input0
[  654.537191] hid-multitouch 0003:0EEF:C000.0001: input: USB HID v2.10 Pointer [eGalax
Inc. eGalaxTouch EXC3000-0337-44.00.00] on usb-ci_hdrc.1-1.1/input0
```

After the messages above , the touchscreen is ready to be used. as shown

```
root@tna00011:~#  cat /proc/bus/input/devices
I: Bus=0003 Vendor=0eef Product=c000 Version=0210
N: Name="eGalax Inc. eGalaxTouch EXC3000-0337-44.00.00"
P: Phys=usb-ci_hdrc.1-1.1/input0
S: Sysfs=/devices/soc0/soc/2100000.aips-bus/2184200.usb/ci_hdrc.1/usb2/2-1/2-1.1/2-
1.1:1.0/0003:0EEF:C000.0001/input/input0
U: Uniq=
H: Handlers=mouse0 event0
B: PROP=2
B: EV=b
B: KEY=400 0 0 0 0 0 0 0 0 0 0
B: ABS=2608000 3
```

Another way to test the touchscreen could be by the **evtest** command. It's possible to perform the **touchscreen** calibration by doing

```
 :~# export DISPLAY=:0
 :~# xinput_calibrator
        Setting calibration data: 0, 4095, 0, 4095
Calibrating EVDEV driver for "eGalax Inc. eGalaxTouch EXC3000-0337-44.00.00"
id=6
```

```
        current calibration values (from XInput): min_x=0, max_x=4095 and
min_y=0, max_y=4095

Doing dynamic recalibration:
        Setting calibration data: 1, 4104, 18, 4130
        --> Making the calibration permanent <--
  copy the snippet below into '/etc/X11/xorg.conf.d/99-calibration.conf'
Section "InputClass"
        Identifier      "calibration"
        MatchProduct    "eGalax Inc. eGalaxTouch EXC3000-0337-44.00.00"
        Option  "Calibration"   "1 4104 18 4130"
        Option  "SwapAxes"      "0"
EndSection
```

OTG (host)

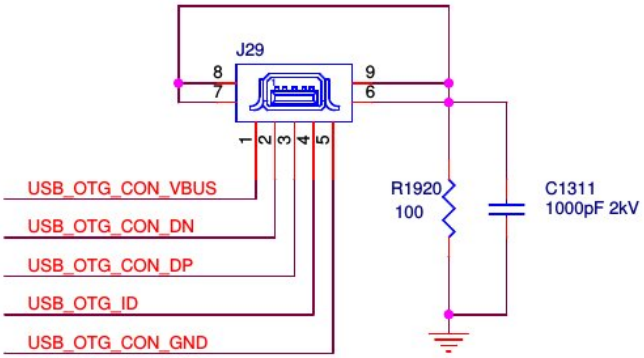

Figure10 USB otg port

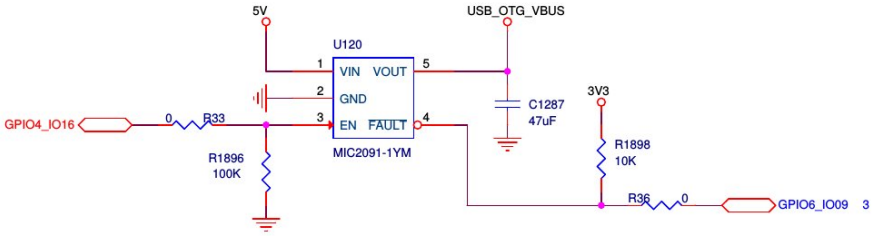

Figure11 Vbus enable

As shown, a gpio is necessary to give power to the attached device, when plugged in.This gpio is drived by kernel as fixed regulator. So in this release this port works like an host.

e.g: when a usb key is plugged, the kernel recognize it

```
root@tna00011:~# [ 2383.294124] usb 1-1: new high-speed USB device number 2 using
ci_hdrc
[ 2383.450060] usb-storage 1-1:1.0: USB Mass Storage device detected
[ 2383.462526] scsi host0: usb-storage 1-1:1.0
[ 2384.727796] scsi 0:0:0:0: Direct-Access     Verbatim STORE N GO            PQ: 0
ANSI: 4
[ 2384.741155] sd 0:0:0:0: [sda] 15257600 512-byte logical blocks: (7.81 GB/7.27 GiB)
[ 2384.750983] sd 0:0:0:0: [sda] Write Protect is off
```

```
[ 2384.757225] sd 0:0:0:0: [sda] Write cache: enabled, read cache: enabled, doesn't
support DPO or FUA
[ 2384.778062]  sda: sda1
[ 2384.787147] sd 0:0:0:0: [sda] Attached SCSI removable disk
[ 2385.402050] FAT-fs (sda1): Volume was not properly unmounted. Some data may be
corrupt. Please run fsck.
```

I2C+GPIOs

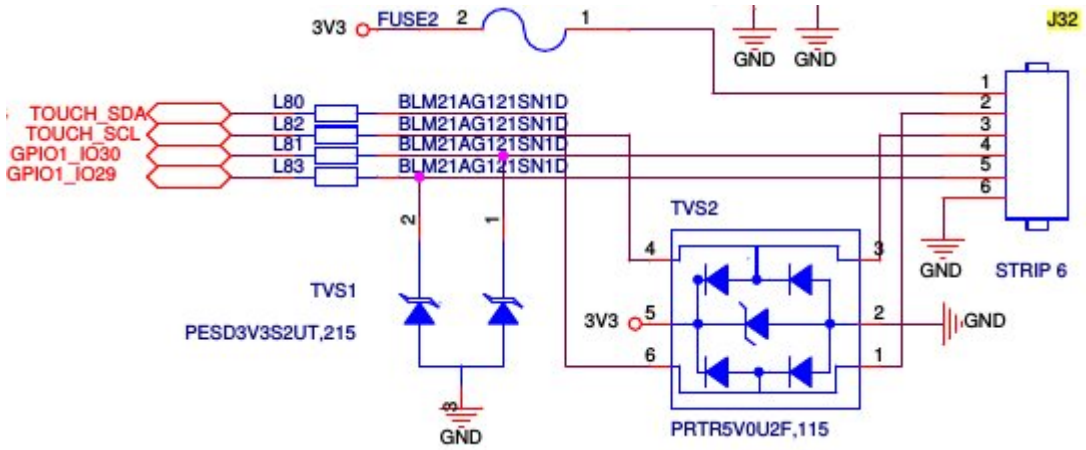

Figure12 J32 pinout

A 6 pin strip is also present on the board in order to attach some i2c device and drive gpios.

I2C

I2C pins are connected to I2C bus number 3 (**I2C3**) so a device will appears on **/dev/i2c-2** . In order to detect the device, is useful to check it with the following command.

```
root@tna00011:~# i2cdetect -y -r 2
     0  1  2  3  4  5  6  7  8  9  a  b  c  d  e  f
00:          -- -- -- -- -- -- -- UU -- -- -- -- --
10: -- -- -- -- -- -- -- -- -- -- -- -- -- -- -- --
20: -- -- -- -- -- -- -- -- -- -- -- -- -- -- -- --
30: -- -- -- -- -- -- -- -- -- -- -- -- -- -- -- --
40: -- -- -- -- -- -- -- -- -- -- -- -- -- -- -- --
50: -- -- -- -- -- -- -- -- -- -- -- -- -- -- -- --
60: -- -- -- -- -- -- -- -- -- -- -- -- -- -- -- --
70: -- -- -- -- -- -- -- --
```

GPIOs

Following the rule by **GPIOx_IOy** means **((x-1)*32)+y** in user space, to address the gpio in figure , the user have to export pin , set direction, set/get the value.

So to gain control over gpios, in user space environment, do as follow if **output** behavior is needed

```
echo 30 > /sys/class/gpio/export
```

```
echo out > /sys/class/gpio/gpio30/direction
echo 1 > /sys/class/gpio/gpio30/value.
```

do as follow if **input** behavior is needed

```
echo 30 > /sys/class/gpio/export
echo in > /sys/class/gpio/gpio30/direction
cat /sys/class/gpio/gpio30/value
```

SD

This interface is recognized by kernel and it's possible to address the device as **/dev/mmcblk1**

```
[    1.744529] sdhci-esdhc-imx 2194000.usdhc: No vmmc regulator found
[    1.750727] sdhci-esdhc-imx 2194000.usdhc: No vqmmc regulator found
[    1.795102] mmc1: SDHCI controller on 2194000.usdhc [2194000.usdhc] using ADMA
[    1.824955] sdhci-esdhc-imx 2198000.usdhc: No vmmc regulator found
[    1.833194] sdhci-esdhc-imx 2198000.usdhc: No vqmmc regulator found
[    1.874493] mmc1: host does not support reading read-only switch, assuming write-
enable
[    1.884066] mmc2: SDHCI controller on 2198000.usdhc [2198000.usdhc] using ADMA
[    1.896564] mmc1: new high speed SDHC card at address 0007
[    1.902627] mmcblk1: mmc1:0007 SD4GB 3.70 GiB
[    1.928059]  mmcblk1: p1
```

eMMC

This interface is recognized by kernel and it's possible to address the device as **/dev/mmcblk2**. eMMC device is a part of Leila Board.

```
[    2.039886] mmc2: MAN_BKOPS_EN bit is not set
[    2.064542] mmc2: new DDR MMC card at address 0001
[    2.070198] mmcblk2: mmc2:0001 Q1J54A 3.64 GiB
[    2.075276] mmcblk2boot0: mmc2:0001 Q1J54A partition 1 2.00 MiB
[    2.081649] mmcblk2boot1: mmc2:0001 Q1J54A partition 2 2.00 MiB
[    2.088067] mmcblk2rpmb: mmc2:0001 Q1J54A partition 3 512 KiB
[    2.104693]  mmcblk2: p1
[   15.241561] EXT4-fs (mmcblk2p1): recovery complete
[   15.247374] EXT4-fs (mmcblk2p1): mounted filesystem with ordered data mode.
Opts: (null)
```

Yocto Jethro 2.0

Yocto is a famous build environment for custom linux distributions. Distribution means that build process produces a bootloader , kernel , rootfs and a set of packages. Sections below focus is on the last two items related to freescale Jethro 2.0 repository. It is strongly recommend to use the distro **Ubuntu 14.04** to build yocto. MAS elettronica use a chrooted environment.

Documentation References

1. http://www.bcmcom.com/CustomerDL/AR6MX/Yocto/Freescale_Yocto_Project_User's_Guide.pdf

2. http://git.freescale.com/git/cgit.cgi/imx/fsl-arm-yocto-bsp.git/tree/default.xml?h=imx-4.1.15-1.0.0_ga&id=7ef17c11dc303763b1c36644b8072940f3f082b0

Repo init

It follows the istrucions for the first build.

```
:~$ schroot -c u14.04
(u14.04)user@host:~$ curl http://commondatastorage.googleapis.com/git-repo-downloads/repo > ~/bin/repo
  % Total    % Received % Xferd  Average Speed   Time    Time     Time  Current
                                 Dload  Upload   Total   Spent    Left  Speed
100 27759  100 27759    0     0  71708      0 --:--:-- --:--:-- --:--:-- 71543
(u14.04)user@host:~$ chmod a+x ~/bin/repo
(u14.04)user@host:~$ cd path/your-dir
(u14.04)user@host:path/your-dir$ repo init -u git://git.freescale.com/imx/fsl-arm-yocto-bsp.git -b imx-4.1.15-1.0.0_ga
(u14.04)user@host:path/your-dir$ repo sync
(u14.04)user@host:path/your-dir$ MACHINE=imx6dlsabresd source fsl-setup-release.sh -b build-x11 -e x11
```

this leads to the following sources status in

```
(u14.04)user@host:path/your-dir/sources$
```

Name	Branch	SHA	remote-name	remote-URL
./meta-qt5	((d5536e3...))	d5536e34ec985c82b621448ab4325e5cbba38560	QT5	git://github.com/meta-qt5/meta-qt5
./meta-fsl-arm	((35b8b9b...))	35b8b9bd9863de208ab60e33b55f10ee43e2619b	yocto	git://git.yoctoproject.org/meta-fsl-arm
./meta-openembedded	((ad6133a...))	ad6133a2e95f4b83b6b3ea413598e2cd5fb3fd90	oe	git://git.openembedded.org/meta-openembedded
./meta-fsl-demos	((2231e94...))	2231e946e7a94d096394f2b2477e8184c9bbde7b	freescale	git://github.com/Freescale/meta-fsl-demos
./meta-fsl-bsp-release	((dfbc90e...))	dfbc90ee74624ce3be636c8bd2a47114fa2b71aa	fsl-release	git://git.freescale.com/imx/meta-fsl-bsp-release
./meta-fsl-arm-extra	((e200df9...))	e200df91b70da254461c59082ddd5db0a3c415a2	freescale	git://github.com/Freescale/meta-fsl-arm-extra
./base	((2.0))	3a9c59399dbcf4790578125f016c6e86aff43367	freescale	git://github.com/Freescale/fsl-community-bsp-base
./meta-browser	((b6d46d6...))	b6d46d69a261fe6bd7c1e9811dc2a9bbd0b79aeb	OSSystems	git://github.com/OSSystems/meta-browser
./poky	((dd0ba9e...))	dd0ba9ea4a11ab15348d4fe3574e4b28784db82f	yocto	git://git.yoctoproject.org/poky

Launch Build

```
(u14.04)user@host:path/your-dir/build-x11$ bitbake fsl-image-qt5
```

First build take a lot of time.

If new packages become necessary , it can be added here.

```
(u14.04)user@host:path/your-dir/build-x11/conf/local.conf

MACHINE ??= 'imx6qsabresd'
DISTRO ?= 'fsl-imx-x11'
PACKAGE_CLASSES ?= "package_rpm"
EXTRA_IMAGE_FEATURES = "debug-tweaks"
USER_CLASSES ?= "buildstats image-mklibs"
PATCHRESOLVE = "noop"
BB_DISKMON_DIRS = "\
    STOPTASKS,${TMPDIR},1G,100K \
    STOPTASKS,${DL_DIR},1G,100K \
    STOPTASKS,${SSTATE_DIR},1G,100K \
    STOPTASKS,/tmp,100M,100K \
    ABORT,${TMPDIR},100M,1K \
    ABORT,${DL_DIR},100M,1K \
    ABORT,${SSTATE_DIR},100M,1K \
    ABORT,/tmp,10M,1K"
PACKAGECONFIG_append_pn-qemu-native = " sdl"
PACKAGECONFIG_append_pn-nativesdk-qemu = " sdl"
ASSUME_PROVIDED += "libsdl-native"
CONF_VERSION = "1"

DL_DIR ?= "path/your-dir/downloads-dir/"
ACCEPT_FSL_EULA = "1"

BB_NUMBER_THREADS = '16'
PARALLEL_MAKE = '-j 16'
```

Example:

to list all available packages provided by metalayers type **bitbake -s** .

```
(u14.04)user@host:path/your-dir/build-x11$ bitbake -s
```

if lighttpd is the chosen packages and it is present in the list. put in the local.conf

```
 IMAGE_INSTALL_append = " lighttpd "
```

then recompile. Once the build has finished, products can be found in **path/your-dir/build-x11/tmp/deploy/images/imx6dlsabresd**. rootfs are compressed in files like

```
fsl-image-qt5-imx6dlsabresd-20161124135908.rootfs.tar.bz2
```

Qt SDK and QtCreator

Generate Sdk script

(u14.04)user@mas-server-sw:/home/ssd/_test/yocto/imx6-tania/build-x11$ **bitbake meta-toolchain-qt5**

```
Loading cache: 100% |
##################################################################################
##################################################################################
#########################| ETA:  00:00:00
Loaded 2826 entries from dependency cache.
NOTE: Resolving any missing task queue dependencies
NOTE: multiple providers are available for jpeg (jpeg, libjpeg-turbo)
NOTE: consider defining a PREFERRED_PROVIDER entry to match jpeg
NOTE: multiple providers are available for jpeg-native (jpeg-native, libjpeg-turbo-
native)
NOTE: consider defining a PREFERRED_PROVIDER entry to match jpeg-native

Build Configuration:
BB_VERSION        = "1.28.0"
BUILD_SYS         = "x86_64-linux"
NATIVELSBSTRING   = "Ubuntu-14.04"
TARGET_SYS        = "arm-poky-linux-gnueabi"
MACHINE           = "imx6dlsabresd"
DISTRO            = "fsl-imx-x11"
DISTRO_VERSION    = "4.1.15-1.2.0"
TUNE_FEATURES     = "arm armv7a vfp neon callconvention-hard cortexa9"
TARGET_FPU        = "vfp-neon"
meta
meta-yocto        = "HEAD:dd0ba9ea4a11ab15348d4fe3574e4b28784db82f"
meta-oe
meta-multimedia   = "HEAD:ad6133a2e95f4b83b6b3ea413598e2cd5fb3fd90"
meta-fsl-arm      = "TNA0001:260117581ab50771ee9a655e82eb303c79210413"
meta-fsl-arm-extra = "HEAD:e200df91b70da254461c59082ddd5db0a3c415a2"
meta-fsl-demos    = "HEAD:2231e946e7a94d096394f2b2477e8184c9bbde7b"
meta-bsp
meta-sdk          = "TNA0001:e9002b29054d8c61dce927984933fc2dc55d40a9"
meta-browser      = "HEAD:b6d46d69a261fe6bd7c1e9811dc2a9bbd0b79aeb"
meta-gnome
meta-networking
meta-python
meta-ruby
meta-filesystems
meta-xfce         = "HEAD:ad6133a2e95f4b83b6b3ea413598e2cd5fb3fd90"
meta-qt5          = "HEAD:d5536e34ec985c82b621448ab4325e5cbba38560"

NOTE: Preparing RunQueue
NOTE: Executing SetScene Tasks
NOTE: Executing RunQueue Tasks
WARNING: QA Issue: gcc-cross-canadian-arm: found library in wrong location: /opt/fsl-
imx-x11/4.1.15-1.2.0/sysroots/x86_64-pokysdk-linux/usr/libexec/arm-poky-linux-
gnueabi/gcc/arm-poky-linux-gnueabi/5.2.0/libcc1plugin.so.0.0.0
gcc-cross-canadian-arm: found library in wrong location: /opt/fsl-imx-x11/4.1.15-
1.2.0/sysroots/x86_64-pokysdk-linux/usr/libexec/arm-poky-linux-gnueabi/gcc/arm-poky-
linux-gnueabi/5.2.0/liblto_plugin.so.0.0.0
gcc-cross-canadian-arm: found library in wrong location: /opt/fsl-imx-x11/4.1.15-
1.2.0/sysroots/x86_64-pokysdk-linux/usr/libexec/arm-poky-linux-gnueabi/gcc/arm-poky-
linux-gnueabi/5.2.0/libcc1.so.0.0.0
```

```
gcc-cross-canadian-arm: found library in wrong location: /opt/fsl-imx-x11/4.1.15-
1.2.0/sysroots/x86_64-pokysdk-linux/usr/libexec/arm-poky-linux-gnueabi/gcc/arm-poky-
linux-gnueabi/5.2.0/liblto_plugin.so.0
gcc-cross-canadian-arm: found library in wrong location: /opt/fsl-imx-x11/4.1.15-
1.2.0/sysroots/x86_64-pokysdk-linux/usr/libexec/arm-poky-linux-gnueabi/gcc/arm-poky-
linux-gnueabi/5.2.0/libcc1plugin.so.0
gcc-cross-canadian-arm: found library in wrong location: /opt/fsl-imx-x11/4.1.15-
1.2.0/sysroots/x86_64-pokysdk-linux/usr/libexec/arm-poky-linux-gnueabi/gcc/arm-poky-
linux-gnueabi/5.2.0/libcc1.so.0
gcc-cross-canadian-arm: found library in wrong location: /opt/fsl-imx-x11/4.1.15-
1.2.0/sysroots/x86_64-pokysdk-linux/usr/libexec/arm-poky-linux-gnueabi/gcc/arm-poky-
linux-gnueabi/5.2.0/libcc1plugin.so
gcc-cross-canadian-arm: found library in wrong location: /opt/fsl-imx-x11/4.1.15-
1.2.0/sysroots/x86_64-pokysdk-linux/usr/libexec/arm-poky-linux-gnueabi/gcc/arm-poky-
linux-gnueabi/5.2.0/liblto_plugin.so
gcc-cross-canadian-arm: found library in wrong location: /opt/fsl-imx-x11/4.1.15-
1.2.0/sysroots/x86_64-pokysdk-linux/usr/libexec/arm-poky-linux-gnueabi/gcc/arm-poky-
linux-gnueabi/5.2.0/libcc1.so
gcc-cross-canadian-arm-dbg: found library in wrong location: /opt/fsl-imx-x11/4.1.15-
1.2.0/sysroots/x86_64-pokysdk-linux/usr/libexec/arm-poky-linux-gnueabi/gcc/arm-poky-
linux-gnueabi/5.2.0/.debug/libcc1plugin.so.0.0.0
gcc-cross-canadian-arm-dbg: found library in wrong location: /opt/fsl-imx-x11/4.1.15-
1.2.0/sysroots/x86_64-pokysdk-linux/usr/libexec/arm-poky-linux-gnueabi/gcc/arm-poky-
linux-gnueabi/5.2.0/.debug/liblto_plugin.so.0.0.0
gcc-cross-canadian-arm-dbg: found library in wrong location: /opt/fsl-imx-x11/4.1.15-
1.2.0/sysroots/x86_64-pokysdk-linux/usr/libexec/arm-poky-linux-gnueabi/gcc/arm-poky-
linux-gnueabi/5.2.0/.debug/libcc1.so.0.0.0 [libdir]
WARNING: QA Issue: nativesdk-qemu rdepends on nativesdk-libbz2, but it isn't a build
dependency? [build-deps]
NOTE: Tasks Summary: Attempted 4592 tasks of which 3429 didn't need to be rerun and all
succeeded.

Summary: There were 2 WARNING messages shown.
(u14.04)user@mas-server-sw:/home/ssd/_test/yocto/imx6-tania/build-x11$ cd tmp/deploy/
(u14.04)user@mas-server-sw:/home/ssd/_test/yocto/imx6-tania/build-x11/tmp/deploy$ ll
total 44
drwxrwxr-x   3 user mas  4096 Nov 22 13:46 images
drwxrwxr-x 722 user mas 28672 Jan 25 13:44 licenses
drwxr-xr-x   2 user mas  4096 Jan 25 14:12 sdk
drwxr-xr-x   7 user mas  4096 Jan 25 14:12 rpm
(u14.04)user@mas-server-sw:/home/ssd/_test/yocto/imx6-tania/build-x11/tmp/deploy$ cd
sdk/
(u14.04)user@mas-server-sw:/home/ssd/_test/yocto/imx6-tania/build-x11/tmp/deploy/sdk$ ll
total 898596
-rw-r--r-- 1 user mas     30831 Jan 25 14:11 fsl-imx-x11-glibc-x86_64-meta-toolchain-
qt5-cortexa9hf-vfp-neon-toolchain-4.1.15-1.2.0.target.manifest
-rw-r--r-- 1 user mas      9822 Jan 25 14:11 fsl-imx-x11-glibc-x86_64-meta-toolchain-
qt5-cortexa9hf-vfp-neon-toolchain-4.1.15-1.2.0.host.manifest
-rwxr-xr-x 1 user mas 920109183 Jan 25 14:12 fsl-imx-x11-glibc-x86_64-meta-toolchain-
qt5-cortexa9hf-vfp-neon-toolchain-4.1.15-1.2.0.sh
```

Generate SDK for Qt5

Copy generated script to a selected folder.

```
user@pc-host:~/customer-toolchain-sdk$ cp /home/ssd/_test/yocto/imx6-tania/build-
x11/tmp/deploy/sdk/fsl-imx-x11-glibc-x86_64-meta-toolchain-qt5-cortexa9hf-vfp-neon-
toolchain-4.1.15-1.2.0.sh .
```

Install sdk

```
user@pc-host:~/customer-toolchain-sdk$ ./fsl-imx-x11-glibc-x86_64-meta-toolchain-qt5-
cortexa9hf-vfp-neon-toolchain-4.1.15-1.2.0.sh
Freescale i.MX Release Distro SDK installer version 4.1.15-1.2.0
===================================================================
Enter target directory for SDK (default: /opt/fsl-imx-x11/4.1.15-1.2.0):
/home/user/customer-toolchain-sdk/sdk/fsl-imx-x11/4.1.15-1.2.0
You are about to install the SDK to "/home/user/customer-toolchain-sdk/sdk/fsl-imx-
x11/4.1.15-1.2.0". Proceed[Y/n]? Y
Extracting
SDK.........................................................................................
.....................................done
Setting it up...done
SDK has been successfully set up and is ready to be used.
Each time you wish to use the SDK in a new shell session, you need to source the
environment setup script e.g.
 $ . /home/user/customer-toolchain-sdk/sdk/fsl-imx-x11/4.1.15-1.2.0/environment-setup-
cortexa9hf-vfp-neon-poky-linux-gnueabi
```

Mas recommend to set up your working tree as follow.

```
user@pc-host:~/customer-toolchain-sdk$ tree -L 5
.
├── fsl-imx-x11-glibc-x86_64-meta-toolchain-qt5-cortexa9hf-vfp-neon-toolchain-4.1.15-
1.2.0.sh
├── projs
│   └── t1_1
│       ├── main.cpp
│       ├── main.o
│       ├── mainwindow.cpp
│       ├── mainwindow.h
│       ├── mainwindow.o
│       ├── mainwindow.ui
│       ├── Makefile
│       ├── moc_mainwindow.cpp
│       ├── moc_mainwindow.o
│       ├── t1_1
│       ├── t1_1.pro
│       ├── t1_1.pro.user
│       ├── to_board.sh
│       └── ui_mainwindow.h
└── sdk
    └── fsl-imx-x11
        └── 4.1.15-1.2.0
            ├── environment-setup-cortexa9hf-vfp-neon-poky-linux-gnueabi
            ├── site-config-cortexa9hf-vfp-neon-poky-linux-gnueabi
            ├── sysroots
            │   ├── cortexa9hf-vfp-neon-poky-linux-gnueabi
            │   └── x86_64-pokysdk-linux
            └── version-cortexa9hf-vfp-neon-poky-linux-gnueabi
```

Launch Qtcreator

MAS Elttronica recommends to use

Qt Creator 3.5.1 based on Qt 5.5.1

```
AnalyzerBase 3.5.1 Code Analyzer Base Plugin.
```

```
  Android 3.5.1 Support for deployment to and execution on Android Devices.
  AutotoolsProjectManager 3.5.1 Autotools project integration.
  BareMetal 3.5.1 This plugin adds a target for bare metal development.
  Bazaar 3.5.1 Bazaar integration.
  Beautifier 3.5.1 Format source files with the help of beautifiers like AStyle,
uncrustify or clang-format.
  BinEditor 3.5.1 Binary editor component.
  Bookmarks 3.5.1 Bookmarks in text editors.
  CMakeProjectManager 3.5.1 CMake support.
  CVS 3.5.1 CVS integration.
  ClangCodeModel 3.5.1 Clang Code Model plugin.
  ClassView 3.5.1 Class View component.
  ClearCase 3.5.1 ClearCase integration.
  CodePaster 3.5.1 Codepaster plugin for pushing/fetching diff from server.
  Core 3.5.1 The core plugin for the Qt IDE.
  CppEditor 3.5.1 C/C++ editor component.
  CppTools 3.5.1 Tools for analyzing C/C++ code.
  Debugger 3.5.1 Debugger integration.
  Designer 3.5.1 Qt Designer integration.
  DiffEditor 3.5.1 Diff editor component.
  EmacsKeys 3.5.1 The main idea behind this plugin is to provide additional actions a
typical emacs user would expect. It doesn't claim to provide full emacs emulation. The
following actions are available:
 - Movement [C-f, C-b, C-n, C-p, M-f, M-b, C-a, C-e, M-<, M->]
 - Mark-based selection [C-SPC, C-x C-x]
 - Cut/copy/yank (doesn't provide kill ring feature) [M-w, C-w, C-y]
 - Kill actions, which interact properly with clipboard [C-k, M-d, C-d]
 - Scrolling (half of the screen, keeps cursor visible) [C-v, M-v]
 - Insert new line and indent [C-j]
 IMPORTANT: Actions are not bound to any key combinations by default. You can find them
under 'EmacsKeys' section in keyboard shortcuts settings.
 Also it's worth mentioning that EmacsKeys plugin forces disabling of menu mnemonics by
calling Qt's qt_set_sequence_auto_mnemonic function with false argument. Many of the
english menu mnemonics get into the way of typical emacs keys,  this includes: Alt+F
(File), Alt+B (Build), Alt+W (Window). It's a temporary solution, it remains until there
is a better one.
  FakeVim 3.5.1 VI-style keyboard navigation.
  GLSLEditor 3.5.1 Editor for GLSL.
  GenericProjectManager 3.5.1 Generic support.
  Git 3.5.1 Git integration.
  Help 3.5.1 Help system.
  ImageViewer 3.5.1 Image Viewer component.
  Ios 3.5.1 Support for deployment to and execution on iOS Devices.
  Macros 3.5.1 Macros in text editors.
  Mercurial 3.5.1 Mercurial integration.
  Perforce 3.5.1 Perforce integration.
  ProjectExplorer 3.5.1 ProjectExplorer framework that can be extended with different
kind of project types.
  PythonEditor 3.5.1 Editor and file creation wizards for Python. Example plugin for
QtCreator API demonstration.
  QbsProjectManager 3.5.1 QBS support.
  QmakeAndroidSupport 3.5.1 Android support for qmake project manager.
  QmakeProjectManager 3.5.1 Provides project type for Qt/QMake .pro files and tools.
  QmlDesigner 3.5.1 Visual Designer for QML files.
  QmlJSEditor 3.5.1 Editor for QML and JavaScript.
  QmlJSTools 3.5.1 Tools for analyzing Qml/JS code.
  QmlProfiler 3.5.1 Qml Profiler Plugin.
  QmlProjectManager 3.5.1 Qt Quick support
  Qnx 3.5.1 Adds support for QNX to Qt Creator.
  QtSupport 3.5.1 Provides support code for build systems.
  RemoteLinux 3.5.1 Support for deployment to and execution on a remote Linux host.
  ResourceEditor 3.5.1 Editor for qrc files.
```

```
  Subversion 3.5.1 Subversion integration.
  TaskList 3.5.1 Use .tasks-files to populate the Issues view.
  TextEditor 3.5.1 Text editor framework and the implementation of the basic text
editor.
  Todo 3.5.1 Adds pane that lists all TODO, FIXME, etc. entries in comments.
  UpdateInfo 3.5.1 Displays Update-Infos for Qt Installer Framework-based Updaters.
  Valgrind 3.5.1 Valgrind Plugin.
  VcsBase 3.5.1 Version Control System Base Plugin.
  Welcome 3.5.1 Default Welcome Screen Plugin.
  WinRt 3.5.1 Helper for Windows Runtime projects.

 (C) 2015 The Qt Company Ltd

user@pc-host:~/customer-toolchain-sdk$ . /home/user/famas-toolchain-sdk/sdk/fsl-imx-
x11/4.1.15-1.2.0/environment-setup-cortexa9hf-vfp-neon-poky-linux-gnueabi
user@pc-host:~/customer-toolchain-sdk$ qtcreator &
```

Config QtCreator kit

As first instance , a creation of new kit is necessary. In the following sections, all necessary steps are presenented . Give the kit name whatever you want.

General

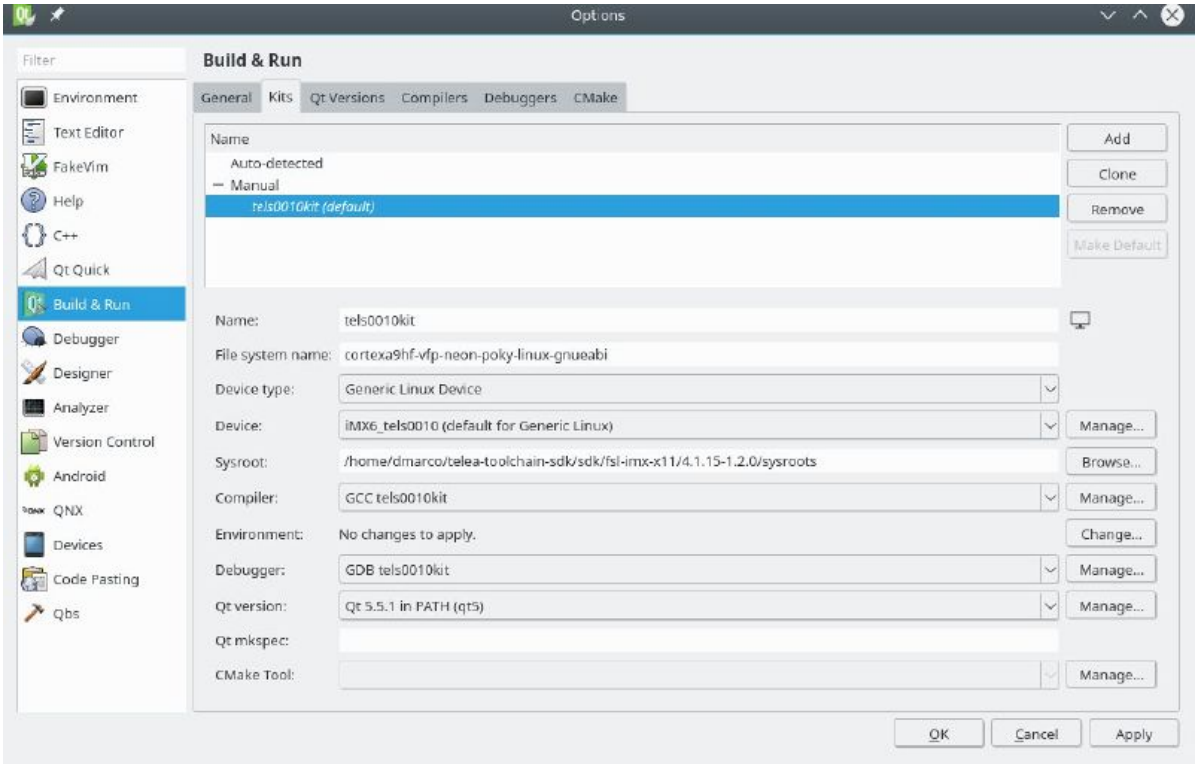

Figure13

Compiler

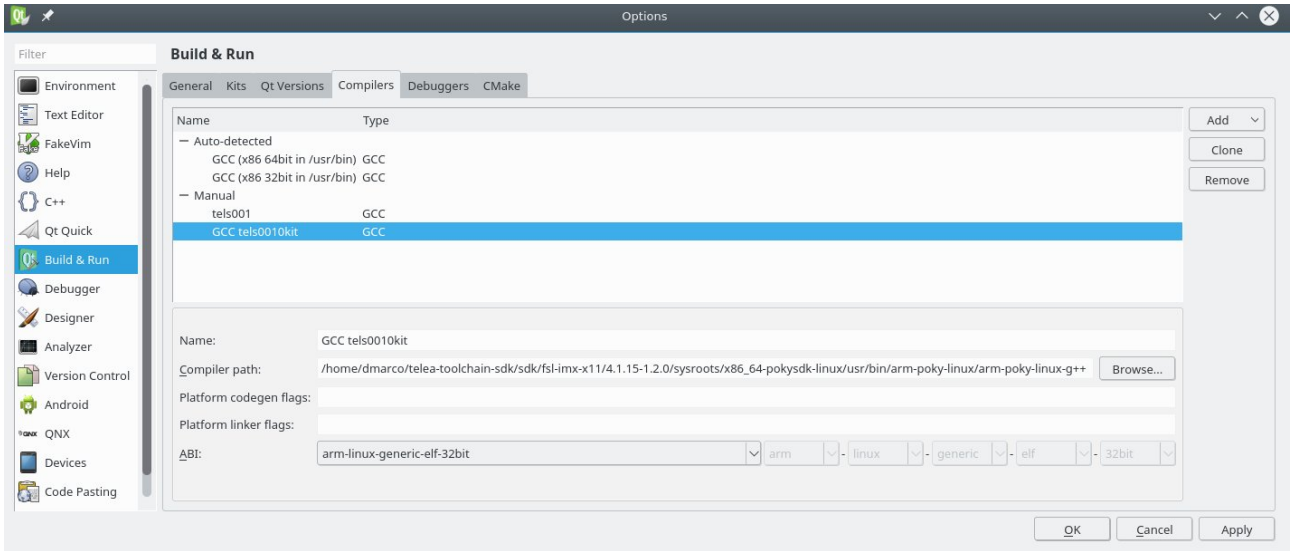

Figure14

debugger

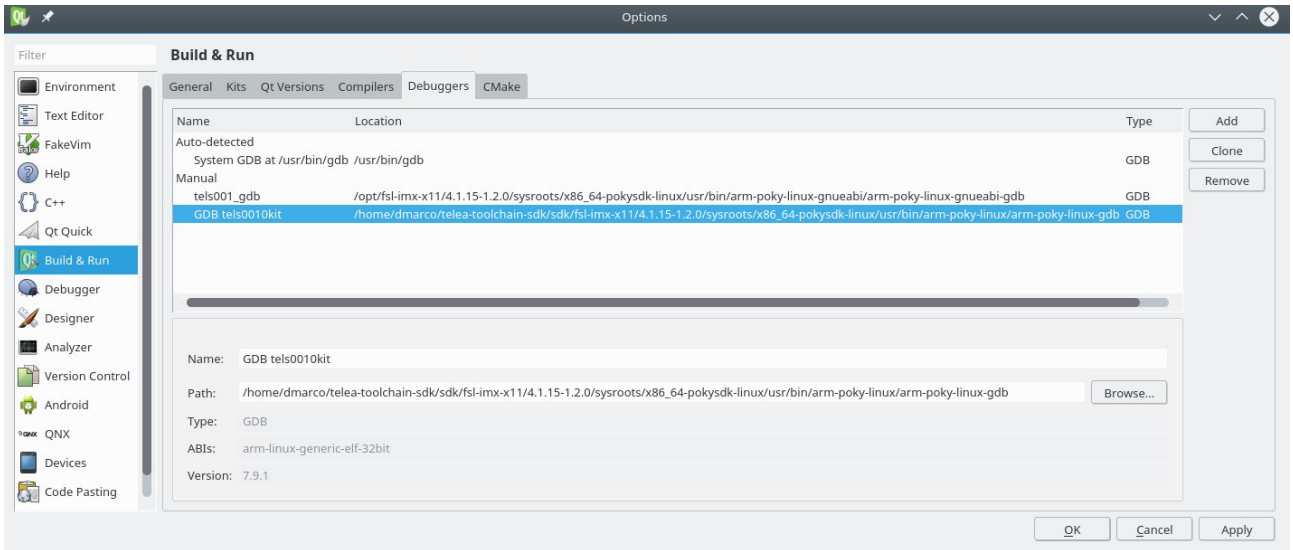

Figure15

Qt version

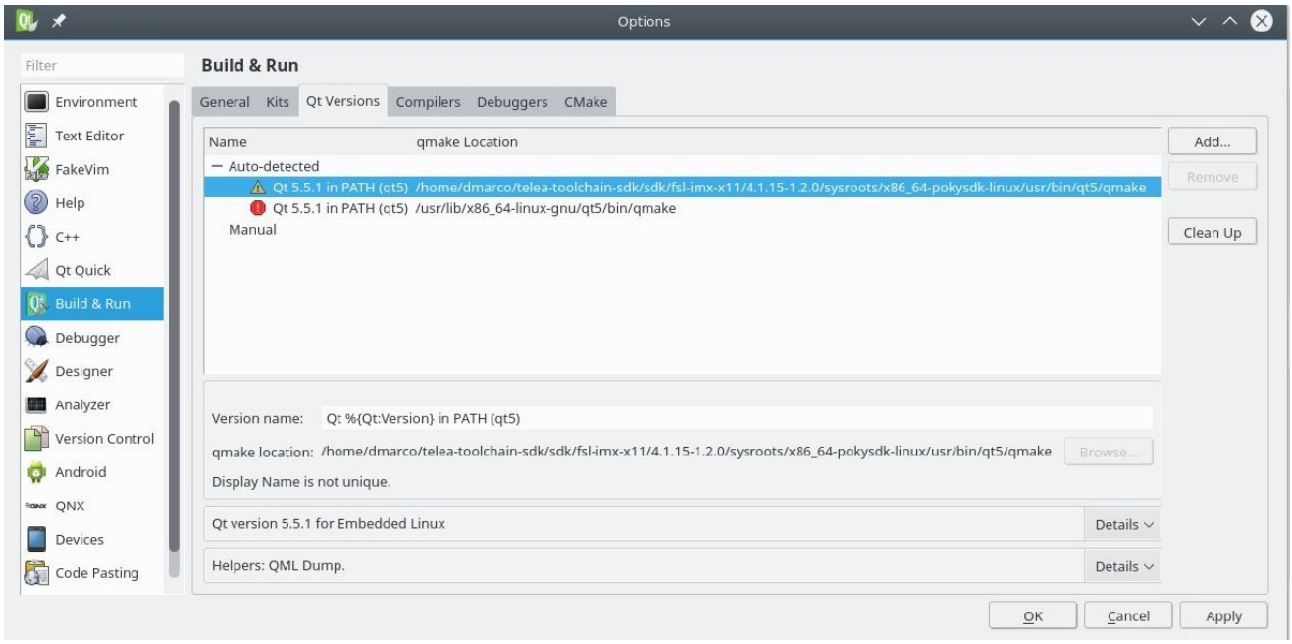

Figure16

Device Details

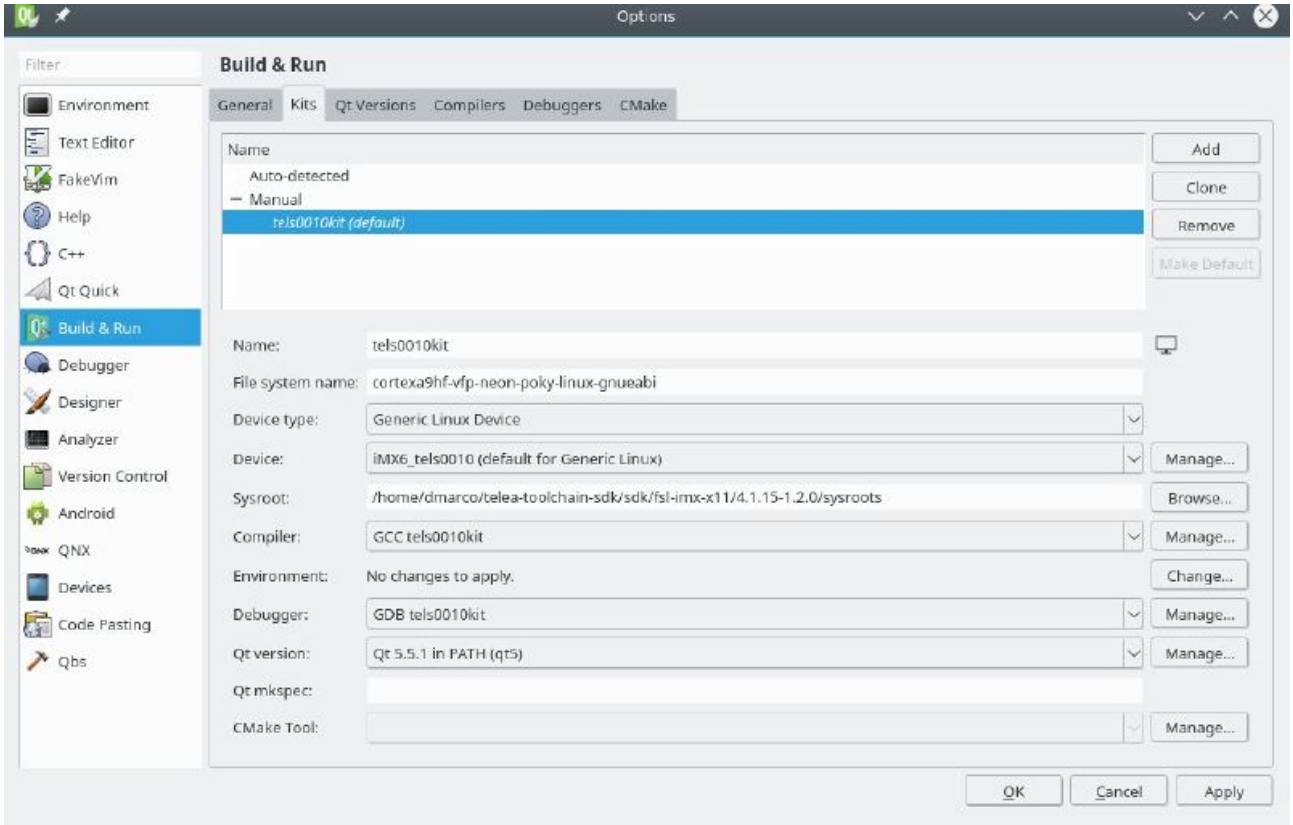

Figure17

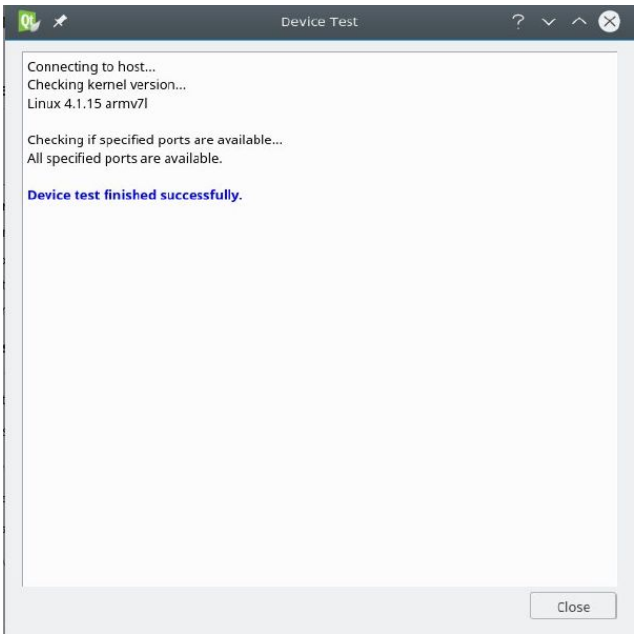

Figure18

Build

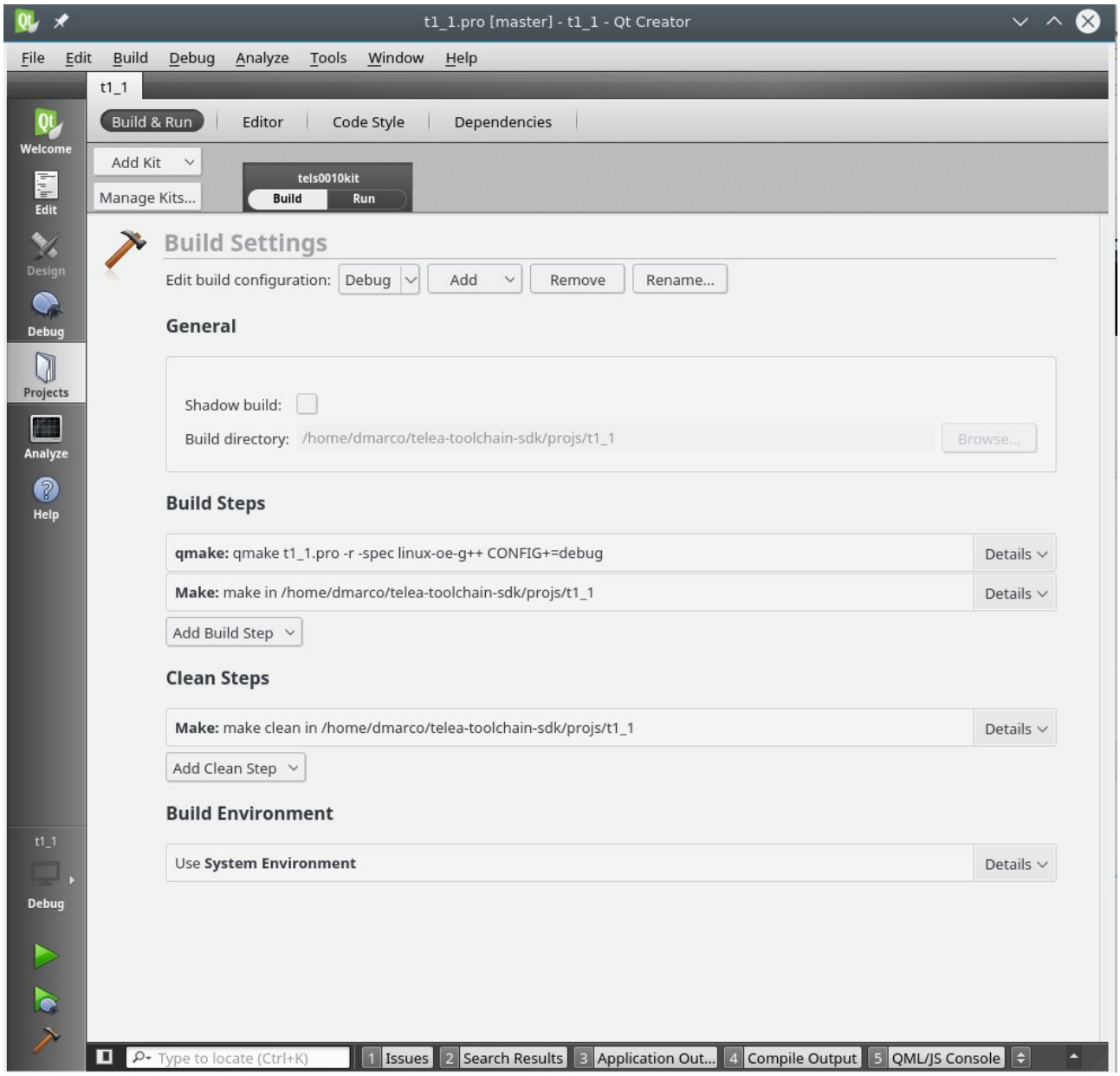

Figure19

Run part1

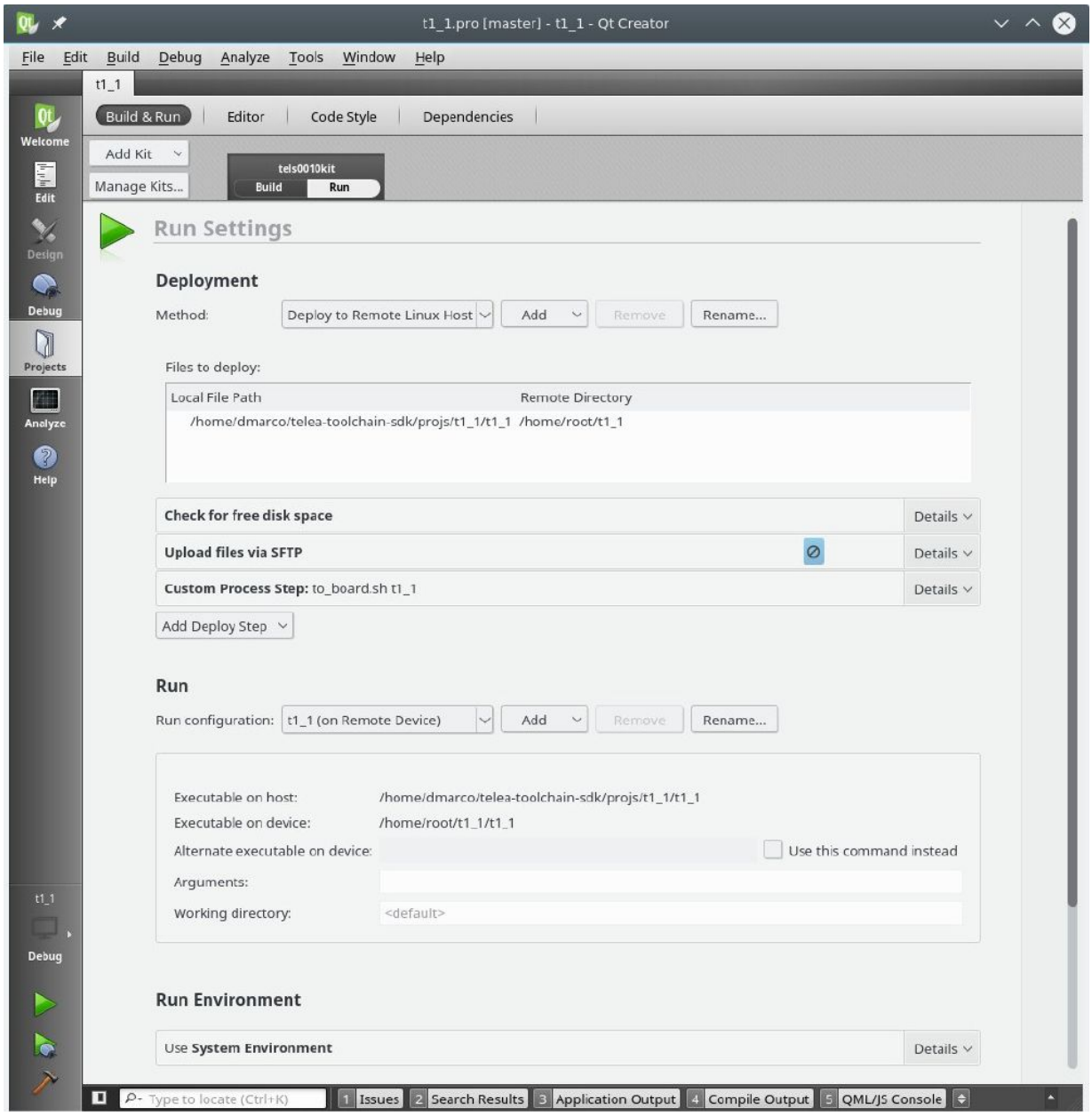

Figure20

Run part2

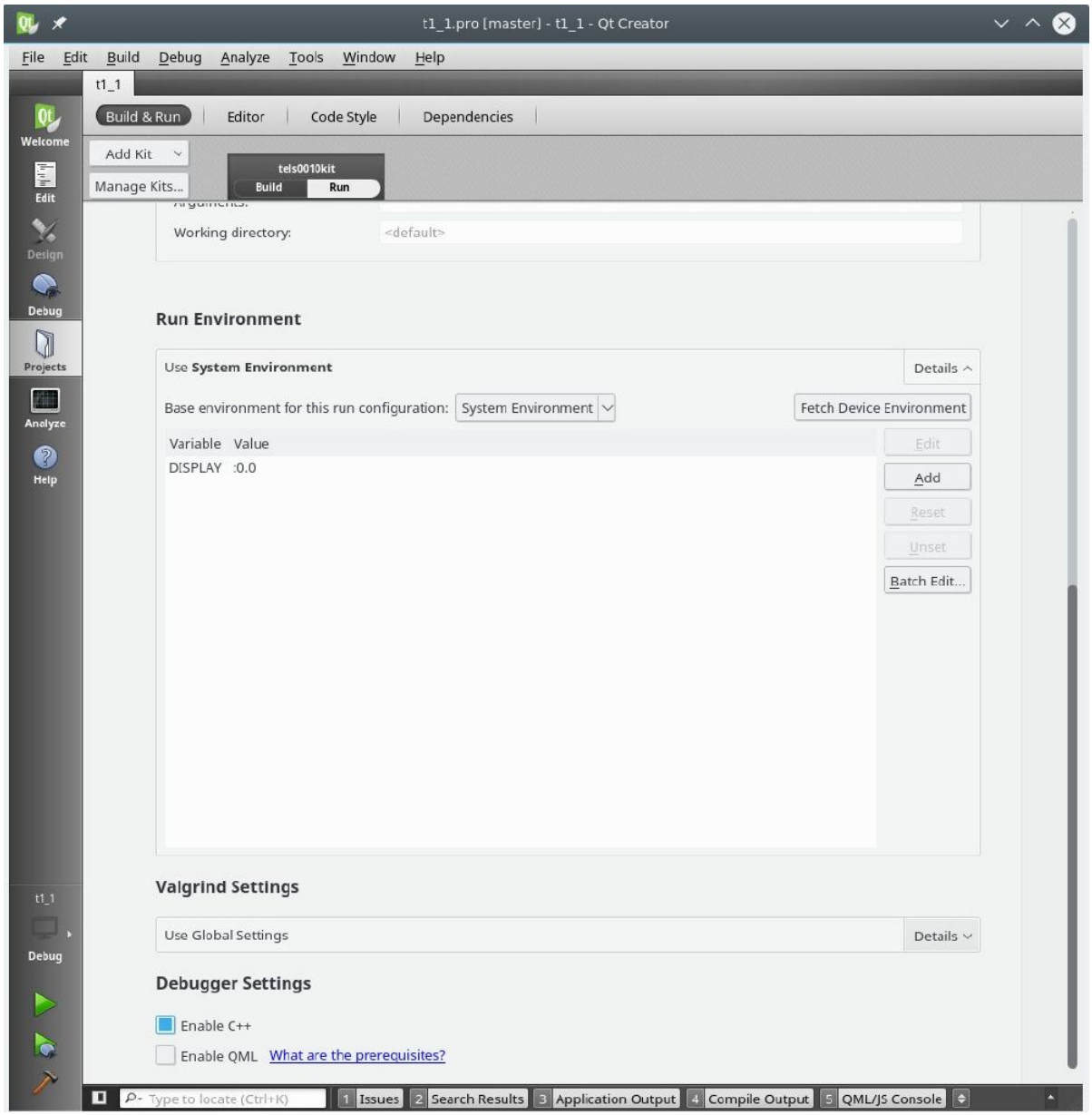

Figure21

Results

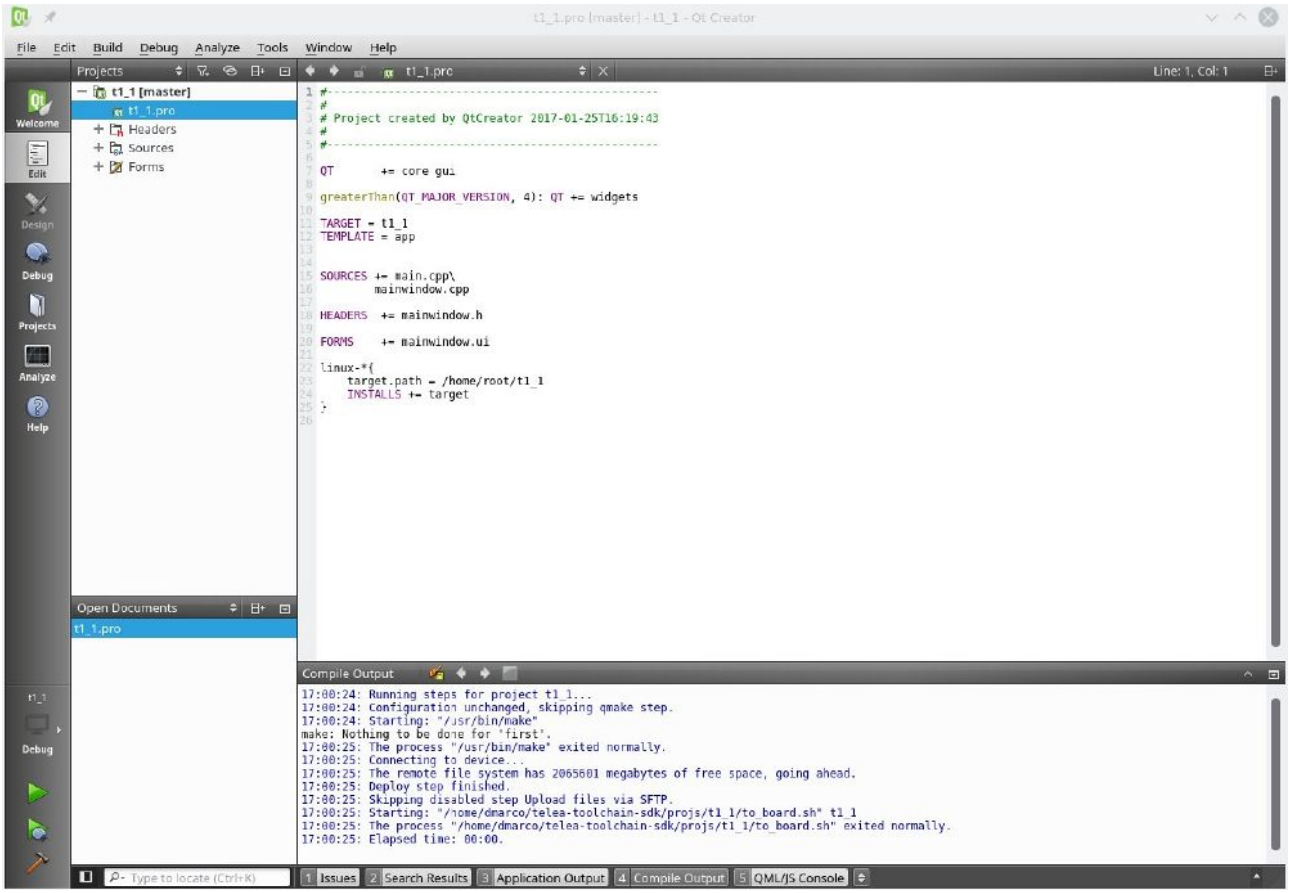

Figure22

Bootstrap messages

```
Tania-kit# run net_nfs_dts
Using FEC device
TFTP from server 192.168.200.234; our IP address is 192.168.200.173
Filename 'tania/tna0001/uImage.md'.
Load address: 0x12000000
Loading: ##################################################################
         ##################################################################
         ##################################################################
         ##################################################################
         ##################################################################
         ##################################################################
         ##################################################################
         5.5 MiB/s
done
Bytes transferred = 6674696 (65d908 hex)
Using FEC device
TFTP from server 192.168.200.234; our IP address is 192.168.200.173
Filename 'tania/tna0001/imx6dl-tna0001.dtb.md'.
Load address: 0x18000000
Loading: ###
         3.1 MiB/s
done
Bytes transferred = 39062 (9896 hex)
## Booting kernel from Legacy Image at 12000000 ...
   Image Name:   Linux-4.1.15 TNA00011 v1.10 549e
   Image Type:   ARM Linux Kernel Image (uncompressed)
   Data Size:    6674632 Bytes = 6.4 MiB
   Load Address: 10008000
   Entry Point:  10008000
   Verifying Checksum ... OK
## Flattened Device Tree blob at 18000000
   Booting using the fdt blob at 0x18000000
   Loading Kernel Image ... OK
   Using Device Tree in place at 18000000, end 1800c895

Starting kernel ...

[    0.000000] Booting Linux on physical CPU 0x0
[    0.000000] Linux version 4.1.15 TNA00011 v1.10 549ecc6 (dmarco@mas-server-
sw) (gcc version 4.9.3 20150413 (prerelease) (Linaro GCC 4.9-2015.05) ) #61 SMP
PREEMPT Tue Jul 11 13:55:19 CEST 2017
[    0.000000] CPU: ARMv7 Processor [412fc09a] revision 10 (ARMv7), cr=10c53c7d
[    0.000000] CPU: PIPT / VIPT nonaliasing data cache, VIPT aliasing
instruction cache
[    0.000000] Machine model: MAS i.MX6 DualLite TNA0001 board
[    0.000000] cma: Reserved 384 MiB at 0x38000000
[    0.000000] Memory policy: Data cache writealloc
[    0.000000] PERCPU: Embedded 12 pages/cpu @a7701000 s16960 r8192 d24000
u49152
[    0.000000] Built 1 zonelists in Zone order, mobility grouping on.  Total
pages: 260096
[    0.000000] Kernel command line: root=/dev/nfs rw
```

```
nfsroot=192.168.200.198:/home/home_nfs/shared/rfs/tania/TNA00011/rfs_yct_fsl_x11
_qt5_opennsh,v3,tcp
ip=192.168.200.173:192.168.200.198:192.168.200.254:255.255.255.0:tania::off:192.
168.200.254:192.168.200.254 console=ttymxc3,115200n8
video=mxcfb0:dev=hdmi,1920x1080M@60,if=RGB24,bpp=32 fbmem=28M consoleblank=0
vmalloc=400M cma=384M
[    0.000000] PID hash table entries: 4096 (order: 2, 16384 bytes)
[    0.000000] Dentry cache hash table entries: 131072 (order: 7, 524288 bytes)
[    0.000000] Inode-cache hash table entries: 65536 (order: 6, 262144 bytes)
[    0.000000] Memory: 632672K/1048576K available (8430K kernel code, 389K
rwdata, 2932K rodata, 428K init, 450K bss, 22688K reserved, 393216K cma-
reserved, 0K highmem)
[    0.000000] Virtual kernel memory layout:
[    0.000000]     vector  : 0xffff0000 - 0xffff1000   (   4 kB)
[    0.000000]     fixmap  : 0xffc00000 - 0xfff00000   (3072 kB)
[    0.000000]     vmalloc : 0xc0800000 - 0xff000000   (1000 MB)
[    0.000000]     lowmem  : 0x80000000 - 0xc0000000   (1024 MB)
[    0.000000]     pkmap   : 0x7fe00000 - 0x80000000   (   2 MB)
[    0.000000]     modules : 0x7f000000 - 0x7fe00000   (  14 MB)
[    0.000000]       .text : 0x80008000 - 0x80b20e60   (11364 kB)
[    0.000000]       .init : 0x80b21000 - 0x80b8c000   ( 428 kB)
[    0.000000]       .data : 0x80b8c000 - 0x80bed4c0   ( 390 kB)
[    0.000000]        .bss : 0x80bf0000 - 0x80c60a5c   ( 451 kB)
[    0.000000] SLUB: HWalign=64, Order=0-3, MinObjects=0, CPUs=2, Nodes=1
[    0.000000] Preemptible hierarchical RCU implementation.
[    0.000000]    Additional per-CPU info printed with stalls.
[    0.000000]    RCU restricting CPUs from NR_CPUS=4 to nr_cpu_ids=2.
[    0.000000] RCU: Adjusting geometry for rcu_fanout_leaf=16, nr_cpu_ids=2
[    0.000000] NR_IRQS:16 nr_irqs:16 16
[    0.000000] L2C-310 erratum 769419 enabled
[    0.000000] L2C-310 enabling early BRESP for Cortex-A9
[    0.000000] L2C-310 full line of zeros enabled for Cortex-A9
[    0.000000] L2C-310 ID prefetch enabled, offset 16 lines
[    0.000000] L2C-310 dynamic clock gating enabled, standby mode enabled
[    0.000000] L2C-310 cache controller enabled, 16 ways, 512 kB
[    0.000000] L2C-310: CACHE_ID 0x410000c8, AUX_CTRL 0x76050001
[    0.000000] mxc_clocksource_init 3000000
[    0.000000] Switching to timer-based delay loop, resolution 333ns
[    0.000006] sched_clock: 32 bits at 3000kHz, resolution 333ns, wraps every
715827882841ns
[    0.000024] clocksource mxc_timer1: mask: 0xffffffff max_cycles: 0xffffffff,
max_idle_ns: 637086815595 ns
[    0.000970] Console: colour dummy device 80x30
[    0.000988] Calibrating delay loop (skipped), value calculated using timer
frequency.. 6.00 BogoMIPS (lpj=30000)
[    0.001004] pid_max: default: 32768 minimum: 301
[    0.001104] Mount-cache hash table entries: 2048 (order: 1, 8192 bytes)
[    0.001117] Mountpoint-cache hash table entries: 2048 (order: 1, 8192 bytes)
[    0.001739] CPU: Testing write buffer coherency: ok
[    0.002007] CPU0: thread -1, cpu 0, socket 0, mpidr 80000000
[    0.002106] Setting up static identity map for 0x10008280 - 0x100082d8
[    0.060245] CPU1: thread -1, cpu 1, socket 0, mpidr 80000001
[    0.060318] Brought up 2 CPUs
[    0.060336] SMP: Total of 2 processors activated (12.00 BogoMIPS).
[    0.060345] CPU: All CPU(s) started in SVC mode.
[    0.060836] devtmpfs: initialized
```

```
[    0.070528] VFP support v0.3: implementor 41 architecture 3 part 30 variant 9
rev 4
[    0.070931] clocksource jiffies: mask: 0xffffffff max_cycles: 0xffffffff,
max_idle_ns: 19112604462750000 ns
[    0.090354] pinctrl core: initialized pinctrl subsystem
[    0.091488] NET: Registered protocol family 16
[    0.100363] DMA: preallocated 256 KiB pool for atomic coherent allocations
[    0.129689] cpuidle: using governor ladder
[    0.159684] cpuidle: using governor menu
[    0.159915] CPU identified as i.MX6DL, silicon rev 1.3
[    0.183545] hw-breakpoint: found 5 (+1 reserved) breakpoint and 1 watchpoint
registers.
[    0.183559] hw-breakpoint: maximum watchpoint size is 4 bytes.
[    0.185120] imx6dl-pinctrl 20e0000.iomuxc: initialized IMX pinctrl driver
[    0.232483] mxs-dma 110000.dma-apbh: initialized
[    0.235420] SCSI subsystem initialized
[    0.235952] usbcore: registered new interface driver usbfs
[    0.236038] usbcore: registered new interface driver hub
[    0.236125] usbcore: registered new device driver usb
[    0.236330] 2000000.aips-bus:usbphy_nop1 supply vcc not found, using dummy
regulator
[    0.236455] 2000000.aips-bus:usbphy_nop2 supply vcc not found, using dummy
regulator
[    0.237953] i2c i2c-0: IMX I2C adapter registered
[    0.237973] i2c i2c-0: can't use DMA
[    0.238520] i2c i2c-1: IMX I2C adapter registered
[    0.238537] i2c i2c-1: can't use DMA
[    0.239198] i2c i2c-2: IMX I2C adapter registered
[    0.239215] i2c i2c-2: can't use DMA
[    0.239363] Linux video capture interface: v2.00
[    0.239430] pps_core: LinuxPPS API ver. 1 registered
[    0.239439] pps_core: Software ver. 5.3.6 - Copyright 2005-2007 Rodolfo
Giometti <giometti@linux.it>
[    0.239474] PTP clock support registered
[    0.259730] imx-ipuv3 2400000.ipu: IPU DMFC NORMAL mode: 1(0~1), 5B(4,5),
5F(6,7)
[    0.261293] MIPI CSI2 driver module loaded
[    0.261589] Advanced Linux Sound Architecture Driver Initialized.
[    0.262867] Bluetooth: Core ver 2.20
[    0.262921] NET: Registered protocol family 31
[    0.262932] Bluetooth: HCI device and connection manager initialized
[    0.262950] Bluetooth: HCI socket layer initialized
[    0.262965] Bluetooth: L2CAP socket layer initialized
[    0.263003] Bluetooth: SCO socket layer initialized
[    0.264058] Switched to clocksource mxc_timer1
[    0.276002] NET: Registered protocol family 2
[    0.276677] TCP established hash table entries: 8192 (order: 3, 32768 bytes)
[    0.276764] TCP bind hash table entries: 8192 (order: 4, 65536 bytes)
[    0.276897] TCP: Hash tables configured (established 8192 bind 8192)
[    0.277033] UDP hash table entries: 512 (order: 2, 16384 bytes)
[    0.277076] UDP-Lite hash table entries: 512 (order: 2, 16384 bytes)
[    0.277285] NET: Registered protocol family 1
[    0.277632] RPC: Registered named UNIX socket transport module.
[    0.277645] RPC: Registered udp transport module.
[    0.277653] RPC: Registered tcp transport module.
[    0.277660] RPC: Registered tcp NFSv4.1 backchannel transport module.
```

```
[    0.278344] CPU PMU: Failed to parse /soc/pmu/interrupt-affinity[0]
[    0.278394] hw perfevents: enabled with armv7_cortex_a9 PMU driver, 7
counters available
[    0.279574] imx rpmsg driver is registered.
[    0.280518] Bus freq driver module loaded
[    0.281568] futex hash table entries: 512 (order: 3, 32768 bytes)
[    0.288569] VFS: Disk quotas dquot_6.6.0
[    0.288768] VFS: Dquot-cache hash table entries: 1024 (order 0, 4096 bytes)
[    0.291009] NFS: Registering the id_resolver key type
[    0.291043] Key type id_resolver registered
[    0.291052] Key type id_legacy registered
[    0.291141] ntfs: driver 2.1.32 [Flags: R/W DEBUG].
[    0.291447] jffs2: version 2.2. (NAND) © 2001-2006 Red Hat, Inc.
[    0.292182] fuse init (API version 7.23)
[    0.296508] io scheduler noop registered
[    0.296530] io scheduler deadline registered
[    0.296740] io scheduler cfq registered (default)
[    0.297264] imx-weim 21b8000.weim: Driver registered.
[    0.299039] backlight_pwm supply power not found, using dummy regulator
[    0.300641] MIPI DSI driver module loaded
[    0.300875] MIPI DSI driver module loaded
[    0.302773] mxc_hdmi 20e0000.hdmi_video: Detected HDMI controller
0x13:0x1a:0xa0:0xc1
[    0.302802] fbcvt: 1920x1080@60: CVT Name - 2.073M9
[    0.302926] mxc_sdc_fb fb@0: registered mxc display driver hdmi
[    0.354142] imx-ipuv3 2400000.ipu: IPU DMFC DP HIGH RESOLUTION: 1(0,1),
5B(2~5), 5F(6,7)
[    0.445382] Console: switching to colour frame buffer device 240x67
[    0.488634] mxc_hdmi 20e0000.hdmi_video: Error only one HDMI output support
now!
[    0.488650] mxc_sdc_fb fb@1: NO mxc display driver found!
[    0.490142] imx-sdma 20ec000.sdma: no iram assigned, using external mem
[    0.490790] imx-sdma 20ec000.sdma: no event needs to be remapped
[    0.491337] imx-sdma 20ec000.sdma: loaded firmware 3.3
[    0.494323] imx-sdma 20ec000.sdma: initialized
[    0.496071] pfuze100-regulator 1-0008: Full layer: 2, Metal layer: 1
[    0.496688] pfuze100-regulator 1-0008: FAB: 0, FIN: 0
[    0.496701] pfuze100-regulator 1-0008: pfuze100 found.
[    0.512446] Serial RS485: enabled
[    0.512470] Serial RS485: enabled cts gpio managementSerial RS485: probe done
[    0.512630] 21e8000.serial: ttymxc1 at MMIO 0x21e8000 (irq = 294, base_baud =
5000000) is a IMX
[    0.513268] 21ec000.serial: ttymxc2 at MMIO 0x21ec000 (irq = 295, base_baud =
5000000) is a IMX
[    0.513844] 21f0000.serial: ttymxc3 at MMIO 0x21f0000 (irq = 296, base_baud =
5000000) is a IMX
[    1.373560] console [ttymxc3] enabled
[    1.377841] 21f4000.serial: ttymxc4 at MMIO 0x21f4000 (irq = 297, base_baud =
5000000) is a IMX
[    1.388800] imx sema4 driver is registered.
[    1.393063] [drm] Initialized drm 1.1.0 20060810
[    1.398263] [drm] Initialized vivante 1.0.0 20120216 on minor 0
[    1.414215] brd: module loaded
[    1.423254] loop: module loaded
[    1.426909] nbd: registered device at major 43
[    1.444000] tun: Universal TUN/TAP device driver, 1.6
```

```
[    1.449109] tun: (C) 1999-2004 Max Krasnyansky <maxk@qualcomm.com>
[    1.455528] CAN device driver interface
[    1.460835] flexcan 2090000.flexcan: device registered (reg_base=c0a30000,
irq=28)
[    1.470097] fec 2188000.ethernet: Phy strap mode ... GPIO 185 to 1
[    1.476337] fec 2188000.ethernet: Phy strap mode ... GPIO 187 to 1
[    1.482542] fec 2188000.ethernet: Phy strap mode ... GPIO 188 to 1
[    1.488766] fec 2188000.ethernet: Phy strap mode ... GPIO 189 to 1
[    1.494991] fec 2188000.ethernet: Phy strap mode ... GPIO 184 to 1
[    1.501198] fec 2188000.ethernet: Phy strap mode ... GPIO 190 to 1
[    1.529598] 2188000.ethernet supply phy not found, using dummy regulator
[    1.536856] pps pps0: new PPS source ptp0
[    1.546051] libphy: fec_enet_mii_bus: probed
[    1.550983] fec 2188000.ethernet eth0: registered PHC device 0
[    1.557734] ehci_hcd: USB 2.0 'Enhanced' Host Controller (EHCI) Driver
[    1.564314] ehci-mxc: Freescale On-Chip EHCI Host driver
[    1.569842] usbcore: registered new interface driver usb-storage
[    1.575958] usbcore: registered new interface driver usb_ehset_test
[    1.583430] 2184800.usbmisc supply vbus-wakeup not found, using dummy
regulator
[    1.595031] ci_hdrc ci_hdrc.0: EHCI Host Controller
[    1.599957] ci_hdrc ci_hdrc.0: new USB bus registered, assigned bus number 1
[    1.624100] ci_hdrc ci_hdrc.0: USB 2.0 started, EHCI 1.00
[    1.630408] hub 1-0:1.0: USB hub found
[    1.634265] hub 1-0:1.0: 1 port detected
[    1.639034] 2184200.usb supply vbus not found, using dummy regulator
[    1.648789] ci_hdrc ci_hdrc.1: EHCI Host Controller
[    1.653703] ci_hdrc ci_hdrc.1: new USB bus registered, assigned bus number 2
[    1.674102] ci_hdrc ci_hdrc.1: USB 2.0 started, EHCI 1.00
[    1.680367] hub 2-0:1.0: USB hub found
[    1.684216] hub 2-0:1.0: 1 port detected
[    1.689251] mousedev: PS/2 mouse device common for all mice
[    1.696909] rtc-pcf85063 0-0051: chip found, driver version 0.0.1
[    1.705372] rtc-pcf85063 0-0051: rtc core: registered rtc-pcf85063 as rtc0
[    1.713001] snvs_rtc 20cc000.snvs:snvs-rtc-lp: rtc core: registered
20cc000.snvs:snvs-r as rtc1
[    1.721887] i2c /dev entries driver
[    1.726838] mxc_v4l2_output v4l2_out: V4L2 device registered as video16
[    1.733642] mxc_v4l2_output v4l2_out: V4L2 device registered as video17
[    1.740714] usbcore: registered new interface driver uvcvideo
[    1.746498] USB Video Class driver (1.1.1)
[    1.752561] imx2-wdt 20bc000.wdog: timeout 60 sec (nowayout=0)
[    1.759163] Bluetooth: HCI UART driver ver 2.3
[    1.763624] Bluetooth: HCI UART protocol H4 registered
[    1.768798] Bluetooth: HCI UART protocol BCSP registered
[    1.774135] Bluetooth: HCI UART protocol ATH3K registered
[    1.779641] usbcore: registered new interface driver bcm203x
[    1.785417] usbcore: registered new interface driver btusb
[    1.791012] usbcore: registered new interface driver ath3k
[    1.796991] sdhci: Secure Digital Host Controller Interface driver
[    1.803183] sdhci: Copyright(c) Pierre Ossman
[    1.807580] sdhci-pltfm: SDHCI platform and OF driver helper
[    1.814625] sdhci-esdhc-imx 2194000.usdhc: No vmmc regulator found
[    1.820824] sdhci-esdhc-imx 2194000.usdhc: No vqmmc regulator found
[    1.865129] mmc1: SDHCI controller on 2194000.usdhc [2194000.usdhc] using
ADMA
```

```
[    1.883231] sdhci-esdhc-imx 2198000.usdhc: could not get ultra high speed
state, work on normal mode
[    1.897238] sdhci-esdhc-imx 2198000.usdhc: No vmmc regulator found
[    1.905499] sdhci-esdhc-imx 2198000.usdhc: No vqmmc regulator found
[    1.942426] mmc1: host does not support reading read-only switch, assuming
write-enable
[    1.958762] mmc1: new high speed SDHC card at address 0007
[    1.964302] mmc2: SDHCI controller on 2198000.usdhc [2198000.usdhc] using
ADMA
[    1.972974] mmcblk1: mmc1:0007 SD4GB 3.70 GiB
[    1.978047] mxc_vpu 2040000.vpu_fsl: VPU initialized
[    1.979366]  mmcblk1: p1
[    1.986346] mxc_vdoa 21e4000.vdoa: i.MX Video Data Order Adapter(VDOA) driver
probed
[    1.994730] mxc_hdmi_cec soc:hdmi_cec@00120000: HDMI CEC initialized
[    2.002014] galcore: clk_get vg clock failed, disable vg!
[    2.007660] Galcore version 5.0.11.41671
[    2.014123] usb 2-1: new high-speed USB device number 2 using ci_hdrc
[    2.049456] mmc2: MAN_BKOPS_EN bit is not set
[    2.074288] mmc2: new DDR MMC card at address 0001
[    2.080028] mmcblk2: mmc2:0001 Q1J54A 3.64 GiB
[    2.085060] mmcblk2boot0: mmc2:0001 Q1J54A partition 1 2.00 MiB
[    2.091457] mmcblk2boot1: mmc2:0001 Q1J54A partition 2 2.00 MiB
[    2.097936] mmcblk2rpmb: mmc2:0001 Q1J54A partition 3 512 KiB
[    2.105882]  mmcblk2: p1
[    2.165866] hub 2-1:1.0: USB hub found
[    2.174199] hub 2-1:1.0: 4 ports detected
[    2.519554] caam 2100000.caam: Entropy delay = 3200
[    2.585309] caam 2100000.caam: Instantiated RNG4 SH0
[    2.646068] caam 2100000.caam: Instantiated RNG4 SH1
[    2.651048] caam 2100000.caam: device ID = 0x0a16010000000100 (Era -524)
[    2.657776] caam 2100000.caam: job rings = 2, qi = 0
[    2.729685] caam algorithms registered in /proc/crypto
[    2.738836] caam_jr 2101000.jr0: registering rng-caam
[    2.744755] platform caam_sm: blkkey_ex: 4 keystore units available
[    2.751229] platform caam_sm: 64-bit clear key:
[    2.756167] platform caam_sm: [0000] 00 01 02 03 04 0f 06 07
[    2.761841] platform caam_sm: 64-bit black key:
[    2.766442] platform caam_sm: [0000] 31 8d 1a d6 e4 b6 a5 78
[    2.772116] platform caam_sm: [0008] 72 18 20 f5 b4 9c 69 7e
[    2.777830] platform caam_sm: 128-bit clear key:
[    2.782463] platform caam_sm: [0000] 00 01 02 03 04 0f 06 07
[    2.788230] platform caam_sm: [0008] 08 09 0a 0b 0c 0d 0e 0f
[    2.793902] platform caam_sm: 128-bit black key:
[    2.798569] platform caam_sm: [0000] 94 88 4a bd 28 20 b0 14
[    2.804260] platform caam_sm: [0008] 6d 23 c2 b7 f4 66 f1 77
[    2.809928] platform caam_sm: 192-bit clear key:
[    2.814572] platform caam_sm: [0000] 00 01 02 03 04 0f 06 07
[    2.820244] platform caam_sm: [0008] 08 09 0a 0b 0c 0d 0e 0f
[    2.825930] platform caam_sm: [0016] 10 11 12 13 14 15 16 17
[    2.831597] platform caam_sm: 192-bit black key:
[    2.836240] platform caam_sm: [0000] b2 49 c1 e7 be c3 e7 e4
[    2.841912] platform caam_sm: [0008] 9a 66 e1 b4 e4 ac 8c 01
[    2.847599] platform caam_sm: [0016] 41 a1 0e 69 5b d6 e7 ba
[    2.853270] platform caam_sm: [0024] 6f a8 ce 70 7d 23 8d bf
[    2.858957] platform caam_sm: 256-bit clear key:
```

```
[    2.863587] platform caam_sm: [0000] 00 01 02 03 04 0f 06 07
[    2.869272] platform caam_sm: [0008] 08 09 0a 0b 0c 0d 0e 0f
[    2.874958] platform caam_sm: [0016] 10 11 12 13 14 15 16 17
[    2.880630] platform caam_sm: [0024] 18 19 1a 1b 1c 1d 1e 1f
[    2.886311] platform caam_sm: 256-bit black key:
[    2.890941] platform caam_sm: [0000] 0f 26 ed c0 b9 18 aa 4f
[    2.896627] platform caam_sm: [0008] 31 7a 70 27 03 b7 0f 33
[    2.902298] platform caam_sm: [0016] 8f d6 a9 f4 09 57 db 89
[    2.907982] platform caam_sm: [0024] 06 e5 f6 ba 71 95 1f 89
[    2.913649] platform caam_sm: 64-bit unwritten blob:
[    2.918639] platform caam_sm: [0000] 00 00 00 00 00 00 00 00
[    2.924324] platform caam_sm: [0008] 00 00 00 00 00 00 00 00
[    2.929996] platform caam_sm: [0016] 00 00 00 00 00 00 00 00
[    2.935680] platform caam_sm: [0024] 00 00 00 00 00 00 00 00
[    2.941351] platform caam_sm: [0032] 00 00 00 00 00 00 00 00
[    2.947036] platform caam_sm: [0040] 00 00 00 00 00 00 00 00
[    2.952706] platform caam_sm: [0048] 00 00 00 00 00 00 00 00
[    2.958419] platform caam_sm: [0056] 00 00 00 00 00 00 00 00
[    2.964109] platform caam_sm: [0064] 00 00 00 00 00 00 00 00
[    2.969782] platform caam_sm: [0072] 00 00 00 00 00 00 00 00
[    2.975467] platform caam_sm: [0080] 00 00 00 00 00 00 00 00
[    2.981137] platform caam_sm: [0088] 00 00 00 00 00 00 00 00
[    2.986823] platform caam_sm: 128-bit unwritten blob:
[    2.991887] platform caam_sm: [0000] 00 00 00 00 00 00 00 00
[    2.997574] platform caam_sm: [0008] 00 00 00 00 00 00 00 00
[    3.003245] platform caam_sm: [0016] 00 00 00 00 00 00 00 00
[    3.008930] platform caam_sm: [0024] 00 00 00 00 00 00 00 00
[    3.014618] platform caam_sm: [0032] 00 00 00 00 00 00 00 00
[    3.020290] platform caam_sm: [0040] 00 00 00 00 00 00 00 00
[    3.025976] platform caam_sm: [0048] 00 00 00 00 00 00 00 00
[    3.031647] platform caam_sm: [0056] 00 00 00 00 00 00 00 00
[    3.037331] platform caam_sm: [0064] 00 00 00 00 00 00 00 00
[    3.043002] platform caam_sm: [0072] 00 00 00 00 00 00 00 00
[    3.048715] platform caam_sm: [0080] 00 00 00 00 00 00 00 00
[    3.054405] platform caam_sm: [0088] 00 00 00 00 00 00 00 00
[    3.060074] platform caam_sm: 196-bit unwritten blob:
[    3.065153] platform caam_sm: [0000] 00 00 00 00 00 00 00 00
[    3.070825] platform caam_sm: [0008] 00 00 00 00 00 00 00 00
[    3.076509] platform caam_sm: [0016] 00 00 00 00 00 00 00 00
[    3.082180] platform caam_sm: [0024] 00 00 00 00 00 00 00 00
[    3.087863] platform caam_sm: [0032] 00 00 00 00 00 00 00 00
[    3.093534] platform caam_sm: [0040] 00 00 00 00 00 00 00 00
[    3.099218] platform caam_sm: [0048] 00 00 00 00 00 00 00 00
[    3.104905] platform caam_sm: [0056] 00 00 00 00 00 00 00 00
[    3.110576] platform caam_sm: [0064] 00 00 00 00 00 00 00 00
[    3.116266] platform caam_sm: [0072] 00 00 00 00 00 00 00 00
[    3.121937] platform caam_sm: [0080] 00 00 00 00 00 00 00 00
[    3.127623] platform caam_sm: [0088] 00 00 00 00 00 00 00 00
[    3.133290] platform caam_sm: 256-bit unwritten blob:
[    3.138367] platform caam_sm: [0000] 00 00 00 00 00 00 00 00
[    3.144038] platform caam_sm: [0008] 00 00 00 00 00 00 00 00
[    3.149722] platform caam_sm: [0016] 00 00 00 00 00 00 00 00
[    3.155433] platform caam_sm: [0024] 00 00 00 00 00 00 00 00
[    3.161106] platform caam_sm: [0032] 00 00 00 00 00 00 00 00
[    3.166794] platform caam_sm: [0040] 00 00 00 00 00 00 00 00
[    3.172465] platform caam_sm: [0048] 00 00 00 00 00 00 00 00
```

```
[    3.178151] platform caam_sm: [0056] 00 00 00 00 00 00 00 00
[    3.183822] platform caam_sm: [0064] 00 00 00 00 00 00 00 00
[    3.189507] platform caam_sm: [0072] 00 00 00 00 00 00 00 00
[    3.195191] platform caam_sm: [0080] 00 00 00 00 00 00 00 00
[    3.200862] platform caam_sm: [0088] 00 00 00 00 00 00 00 00
[    3.206764] platform caam_sm: 64-bit black key in blob:
[    3.212006] platform caam_sm: [0000] 50 4b f8 0b d3 26 9c cc
[    3.217697] platform caam_sm: [0008] bd 26 1d 0f 0b 5f 17 90
[    3.223369] platform caam_sm: [0016] d5 63 c9 0a 02 f3 4b 6f
[    3.229055] platform caam_sm: [0024] 63 f4 80 3c fb 19 bb ae
[    3.234741] platform caam_sm: [0032] 60 4f 47 cc 03 13 c4 79
[    3.240412] platform caam_sm: [0040] 1c 7b 4b d6 8c 05 17 44
[    3.246102] platform caam_sm: [0048] 6b d1 32 47 b2 5f 51 5e
[    3.251774] platform caam_sm: [0056] 00 00 00 00 00 00 00 00
[    3.257459] platform caam_sm: [0064] 00 00 00 00 00 00 00 00
[    3.263130] platform caam_sm: [0072] 00 00 00 00 00 00 00 00
[    3.268818] platform caam_sm: [0080] 00 00 00 00 00 00 00 00
[    3.274503] platform caam_sm: [0088] 00 00 00 00 00 00 00 00
[    3.280171] platform caam_sm: 128-bit black key in blob:
[    3.285509] platform caam_sm: [0000] 55 e2 ca 55 65 28 52 da
[    3.291181] platform caam_sm: [0008] 93 90 b0 92 67 f5 70 fe
[    3.296865] platform caam_sm: [0016] bb 39 af 25 01 13 bc a6
[    3.302536] platform caam_sm: [0024] 6b 62 65 44 d2 75 83 df
[    3.308220] platform caam_sm: [0032] 12 a4 a7 39 d8 eb 29 3e
[    3.313891] platform caam_sm: [0040] 79 72 b3 7d 57 d8 c4 49
[    3.319576] platform caam_sm: [0048] e0 1f 6d 4d 01 6e b3 32
[    3.325262] platform caam_sm: [0056] 90 c9 0d e8 11 ef 5e 04
[    3.330932] platform caam_sm: [0064] 00 00 00 00 00 00 00 00
[    3.336616] platform caam_sm: [0072] 00 00 00 00 00 00 00 00
[    3.342287] platform caam_sm: [0080] 00 00 00 00 00 00 00 00
[    3.347971] platform caam_sm: [0088] 00 00 00 00 00 00 00 00
[    3.353638] platform caam_sm: 192-bit black key in blob:
[    3.359002] platform caam_sm: [0000] 68 e3 a1 87 a5 fd 62 25
[    3.364692] platform caam_sm: [0008] c3 fe a6 34 40 5d e8 8e
[    3.370364] platform caam_sm: [0016] b0 03 b3 0b 21 f9 6c b0
[    3.376055] platform caam_sm: [0024] 0a f1 03 36 7c 89 29 10
[    3.381727] platform caam_sm: [0032] d0 bd be a8 1b fb 4c aa
[    3.387413] platform caam_sm: [0040] e9 1d 33 76 31 a7 86 56
[    3.393085] platform caam_sm: [0048] 45 03 92 81 b4 f7 ac 07
[    3.398770] platform caam_sm: [0056] 54 de d8 6e c7 40 77 76
[    3.404455] platform caam_sm: [0064] 94 3e 1b ae 2d 68 fe ca
[    3.410126] platform caam_sm: [0072] 00 00 00 00 00 00 00 00
[    3.415865] platform caam_sm: [0080] 00 00 00 00 00 00 00 00
[    3.421542] platform caam_sm: [0088] 00 00 00 00 00 00 00 00
[    3.427250] platform caam_sm: 256-bit black key in blob:
[    3.432578] platform caam_sm: [0000] 26 8f 31 2b 05 cd 27 0a
[    3.438293] platform caam_sm: [0008] eb 56 6a e2 c5 40 8e 29
[    3.443967] platform caam_sm: [0016] fc 69 22 2f b0 65 d0 18
[    3.449677] platform caam_sm: [0024] 96 e6 db 19 cf f7 f5 ac
[    3.455367] platform caam_sm: [0032] c8 32 4a f6 f1 fe 22 ab
[    3.461039] platform caam_sm: [0040] cb 68 8c 0e 5a fc 94 56
[    3.466725] platform caam_sm: [0048] b8 45 5f 4a 3b 21 63 da
[    3.472397] platform caam_sm: [0056] a9 2a 24 ee f9 fb 3c 2a
[    3.478081] platform caam_sm: [0064] 13 ad 54 13 08 cb f1 99
[    3.483752] platform caam_sm: [0072] 5e 43 74 0a 17 49 0d 45
[    3.489436] platform caam_sm: [0080] 00 00 00 00 00 00 00 00
```

```
[    3.495121] platform caam_sm: [0088] 00 00 00 00 00 00 00 00
[    3.501007] platform caam_sm: restored 64-bit black key:
[    3.506357] platform caam_sm: [0000] 99 da b4 11 fc 7b 18 ff
[    3.512029] platform caam_sm: [0008] e4 27 ec 56 2e 3c f0 31
[    3.517716] platform caam_sm: restored 128-bit black key:
[    3.523128] platform caam_sm: [0000] 94 88 4a bd 28 20 b0 14
[    3.528814] platform caam_sm: [0008] 6d 23 c2 b7 f4 66 f1 77
[    3.534493] platform caam_sm: restored 192-bit black key:
[    3.539905] platform caam_sm: [0000] b2 49 c1 e7 be c3 e7 e4
[    3.545591] platform caam_sm: [0008] 9a 66 e1 b4 e4 ac 8c 01
[    3.551262] platform caam_sm: [0016] 38 5b 27 a2 1d ee cf 72
[    3.556975] platform caam_sm: [0024] 9a 76 f2 0e 51 f2 b7 18
[    3.562644] platform caam_sm: restored 256-bit black key:
[    3.568073] platform caam_sm: [0000] 0f 26 ed c0 b9 18 aa 4f
[    3.573745] platform caam_sm: [0008] 31 7a 70 27 03 b7 0f 33
[    3.579430] platform caam_sm: [0016] 8f d6 a9 f4 09 57 db 89
[    3.585115] platform caam_sm: [0024] 06 e5 f6 ba 71 95 1f 89
[    3.591107] snvs-secvio 20cc000.caam-snvs: can't get snvs clock
[    3.597123] snvs-secvio 20cc000.caam-snvs: violation handlers armed - non-
secure state
[    3.605808] usbcore: registered new interface driver usbhid
[    3.611395] usbhid: USB HID core driver
[    3.618256] sgtl5000 2-000a: sgtl5000 revision 0x11
[    3.650201] fsl-asrc 2034000.asrc: driver registered
[    3.660432] sgtl5000 2-000a: Using internal LDO instead of VDDD
[    3.672934] imx-sgtl5000 sound: sgtl5000 <-> 2028000.ssi mapping ok
[    3.686080] imx-audio-hdmi sound-hdmi: hdmi-hifi <-> soc:hdmi_audio@00120000
mapping ok
[    3.695027] NET: Registered protocol family 26
[    3.700309] NET: Registered protocol family 10
[    3.705880] sit: IPv6 over IPv4 tunneling driver
[    3.711209] NET: Registered protocol family 17
[    3.715739] can: controller area network core (rev 20120528 abi 9)
[    3.722010] NET: Registered protocol family 29
[    3.726524] can: raw protocol (rev 20120528)
[    3.730809] can: broadcast manager protocol (rev 20120528 t)
[    3.736510] can: netlink gateway (rev 20130117) max_hops=1
[    3.742302] Bluetooth: RFCOMM TTY layer initialized
[    3.747238] Bluetooth: RFCOMM socket layer initialized
[    3.752407] Bluetooth: RFCOMM ver 1.11
[    3.756251] Bluetooth: BNEP (Ethernet Emulation) ver 1.3
[    3.761574] Bluetooth: BNEP filters: protocol multicast
[    3.766843] Bluetooth: BNEP socket layer initialized
[    3.771824] Bluetooth: HIDP (Human Interface Emulation) ver 1.2
[    3.777781] Bluetooth: HIDP socket layer initialized
[    3.782821] 8021q: 802.1Q VLAN Support v1.8
[    3.787089] Key type dns_resolver registered
[    3.797633] dhd_module_init in
[    3.803246] rtc-pcf85063 0-0051: setting system clock to 2000-01-01 00:00:13
UTC (946684813)
[    3.935355] fec 2188000.ethernet eth0: Freescale FEC PHY driver [Micrel
KSZ9031 Gigabit PHY] (mii_bus:phy_addr=2188000.ethernet:02, irq=-1)
[    3.974251] IPv6: ADDRCONF(NETDEV_UP): eth0: link is not ready
[   10.934787] fec 2188000.ethernet eth0: Link is Up - 1Gbps/Full - flow control
rx/tx
[   10.954365] IPv6: ADDRCONF(NETDEV_CHANGE): eth0: link becomes ready
```

```
[   10.974490] IP-Config: Complete:
[   10.977761]      device=eth0, hwaddr=00:01:02:03:04:81,
ipaddr=192.168.200.173, mask=255.255.255.0, gw=192.168.200.254
[   10.988628]      host=tania, domain=, nis-domain=(none)
[   10.993882]      bootserver=192.168.200.198, rootserver=192.168.200.198,
rootpath=
[   11.001387]      nameserver0=192.168.200.254, nameserver1=192.168.200.254
[   11.008573] VGEN3: disabling
[   11.012068] VGEN2: disabling
[   11.015562] VGEN1: disabling
[   11.018963] SWBST: disabling
[   11.022361] SW4: disabling
[   11.025178] can-stby: disabling
[   11.028780] ALSA device list:
[   11.031773]   #0: imx6-tel0001-sgtl5000
[   11.035719]   #1: imx-hdmi-soc
[   11.047872] VFS: Mounted root (nfs filesystem) on device 0:14.
[   11.054172] devtmpfs: mounted
[   11.057733] Freeing unused kernel memory: 428K (80b21000 - 80b8c000)
INIT: version 2.88 booting
Starting udev
[   11.696009] udevd[184]: starting version 182
[   13.707392] random: nonblocking pool is initialized
[   15.093722] EXT4-fs (mmcblk2p1): recovery complete
[   15.099490] EXT4-fs (mmcblk2p1): mounted filesystem with ordered data mode.
Opts: (null)
/etc/rcS.d/S05modutils.sh: line 19: [: too many arguments
bootlogd: cannot allocate pseudo tty: No such file or directory
ALSA: Restoring mixer settings...
No state is present for card imx6tel0001sgtl
Found hardware: "imx6-tel0001-sg" "" "" "" ""
Hardware is initialized using a generic method
/usr/share/alsa/init/default:100: value write error: Input/output error
/usr/share/alsa/init/default:100: value write error: Input/output error
No state is present for card imx6tel0001sgtl
Thu Nov 24 14:01:19 UTC 2016
INIT: Entering runlevel: 5
Configuring network interfaces... ifup skipped for nfsroot interface eth0
run-parts: /etc/network/if-pre-up.d/nfsroot exited with code 1
Starting Xserver
Starting system message bus: dbus.
Starting Connection Manager
Starting OpenBSD Secure Shell server: sshd
done.
Starting rpcbind daemon...done.
starting statd: done
Starting advanced power management daemon: No APM support in kernel
(failed.)
exportfs: can't open /etc/exports for reading
NFS daemon support not enabled in kernel
Starting syslogd/klogd: done
 * Starting Avahi mDNS/DNS-SD Daemon: avahi-daemon                      [ ok ]
Starting Telephony daemon
Starting Linux NFC daemon
Starting autohdmi:
Running local boot scripts (/etc/rc.local).
```

```
Freescale i.MX Release Distro 4.1.15-1.2.0 tna00011 /dev/ttymxc3

root
root@tna00011:~#
```

Users

•root , password: root

•user, password: root

Contact Informations

Mas Elettronica Sas
Via Rossi 1
35030 Rubano (PD)
Italy.
Tel +39 0498687469
Fax +39 0498687469

Sales : info@maselettronica.com
Support: support@maselettronica.com