Leila
Freescale i.MX6-based system on module
Hardware Manual

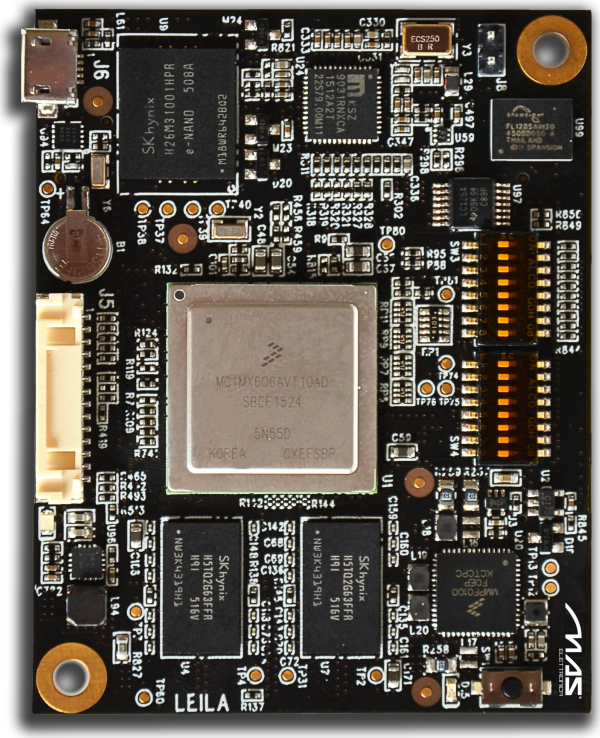

Mas Elettronica Sas
Via Risorgimento 16/C
35030 Selvazzano Dentro (PD)
Italy.

Revision History..

Rev.	Document Code	Released	Written	Verified	Approved
1.0	**Leila i.MX6 Hardware & Software Manual**	07/09/2015	S.Mascetti	M.Tomasi	S.Mascetti
1.2	**Leila i.MX6 Hardware & Software Manual**	05/02/2017	F.Bonollo	S.Mascetti	S.Mascetti

CONTENTS

Summary

1

INTRODUCTION

STELLA in an SBC (Single Board Computer) supporting the Freescale's **i.MX6 Quad/ Dual/ DualLite/ Single core ARM Cortex-A9**. The CPU frequency peaks up to1.2GHz. The board delivers high CPU and graphical performance with minimum power consumption.
It processes data and communicates very effectively thanks to its multi-core processing and connects to the Cloud and Internet of Things (IOT) through the MQTT protocol. Robustness and reliability, especially in environmental conditions of high stress, versatile solutions -40 to 85 °C temperature range and Dual CAN support is ideal for industrial and medical applications, while 1080p video and graphics accelerations make it equally suitable for intensive multimedia applications.

Supporting Markets:
Stella targets a wide range of applications, including: Digital Signage, Medical Devices,Navigation, Industrial Automation, HMIs, Avionics, Entertainment system, POS, Data Acquisition,
Robotics, Gaming and much more

Operating systems support:

- Linux Kernel 3.1.x Yocto
- Android Lollipop 5.02
- Ubuntu 12.04 LTS

Contact support for further information mailto:info@maselettronica.com

FEATURES

The features of the Leila CPU board

- CPU i.MX6 Freescale
- CPU Type Cortex-A9 MPCore up to Single/Dual and Quad core
- CPU clock (Max) up to 1.2GHz
- RAM up to 4Gbyte DDR3
- eMMC up to 64Gbyte
- Camera Interface 2 x CSI(16 bit), 1 x MIPI
- Video Encore /Decore 1080p60 H.264 Decore / 1080p30 H.264 Encore
- 3D Graphic Acceleration GPU 3D Vivante
- HDMI v.1.4 1920x1080
- LVDS Dual 1920x1200 24-bit
- TTL DISPLAY 24 BIT
- SATA II 3Gb/s
- PCIe 2.0 (1 lane)
- FlexCAN
- SD/MMC x 2
- SPI_flash 16MByte for secure boot
- Ethernet 10/100/1000 Mbit/s
- Power Monitor
- External RTC
- USB Host/Device USB 2.0: 1 x Host, 1 x OTG
- Uart x 4 up to 3,6 Mbps
- Dimentions 55x71mm
- Power 5 V

SYSTEM DESCRIPTION

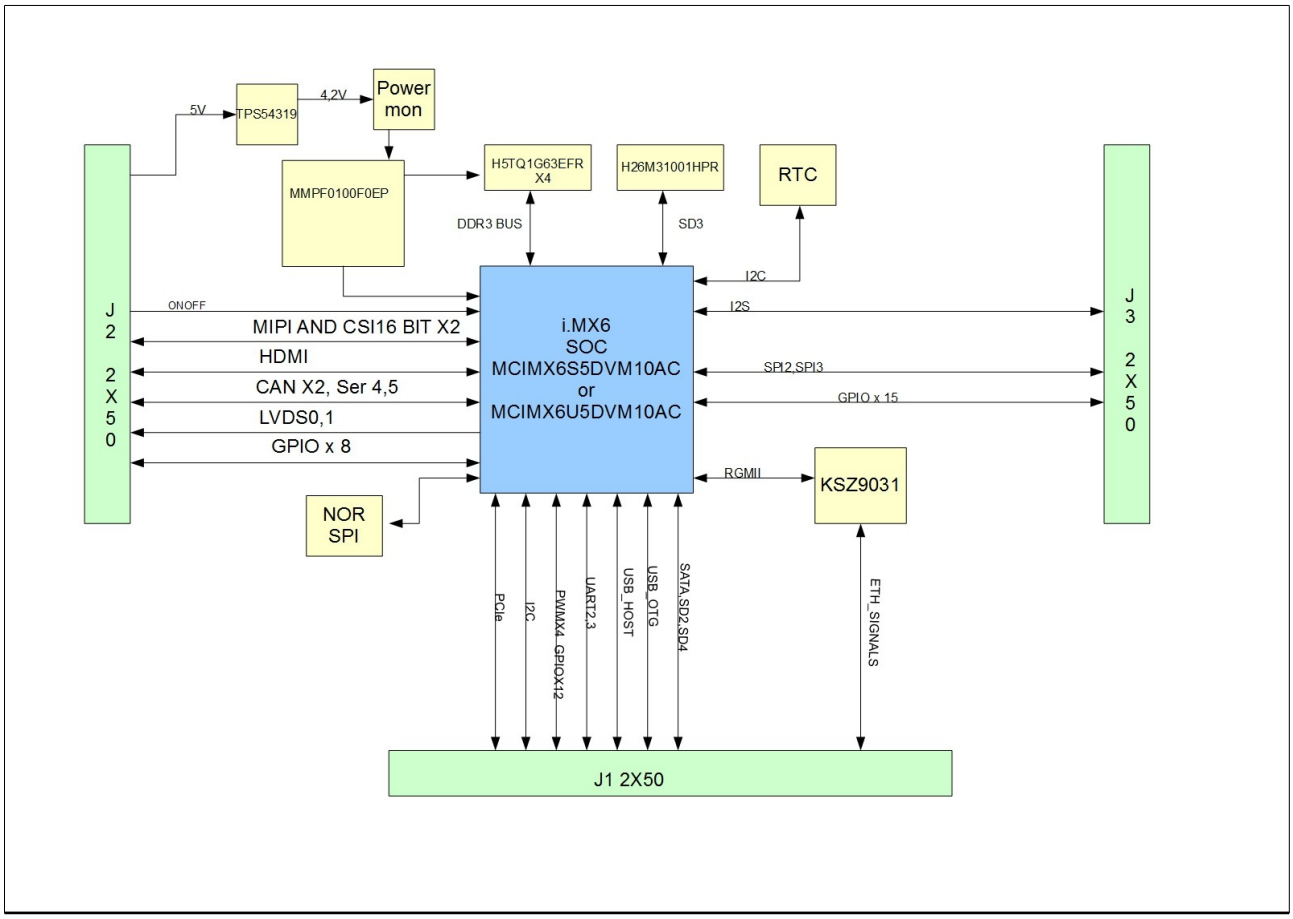

Leila Block Diagram

2

CPU

The Stella supports i.MX6 SOC supports of ARM Cortex ™ A9 Solo/Dual/Dual Lite and Quad processors, commercial and Industrial temperature range. The table below summarizes the feature of the processors supported by Stella:

	iMX6Quad	iMX6Dual	i.MX6 Dual Lite	iMX6Solo
Freescale SoC	MCIMX6Q5EYM10AC	MCIMX6D5EYM10AC	MCIMX6U5DVM10AC	MCIMX6S5DVM10AC
CPU Cores	4	2	2	1
L1 Instruction Cache (each core)	32KByte	32KByte	32KByte	32KByte
L1 Data Cache (each core)	32KByte	32KByte	32KByte	32KByte
L2 Cache (shared by cores)	1MByte	1MByte	512KB	512KB
NEON MPE	√	√	√	√
Maximum CPU frequency	1,2GHz	1,2GHz	1GHz	1GHz
ARM TrustZone	√	√	√	√
Advanced High Assurance Boot	√	√	√	√
Cryptographic Acceleration and Assurance Module	√	√	√	√
Secure Real-Time Clock	√	√	√	√
Secure JTAG Controller	√	√	√	√

2.1 MEMORIES

The table below summarizes the main features of the memory support for Stella:

	IMX6 Quad	IMX6 Dual	i.MX6 Dual Lite	IMX6 Solo
DDR3 RAM Size Max	4GByte	4GByte	4GByte	512Mbyte
DDR3 RAM Speed	1066MT/s	1066MT/s	1066MT/s	800MT/s
DDR3 RAM Memory Width	64bit	64bit	64bit	32bit
SPI Flash	16Mbyte	16Mbyte	16Mbyte	16Mbyte
eMMC	4-64Gbyte	4-64Gbyte	4-64Gbyte	4-64Gbyte

DDR3 Memory

The Stella supports up to 4Gbyte of DDR3 SDRAM, depending on the SOC it can be from 256Mbytes to 4Gbytes and 32/64 bits.
For more information about the DDR3 memory devices see the following link.

http://www.micron.com/products/dram/ddr3-sdram

NOR SPI Flash

Leila supports a NOR SPI for secure boot.
More informations for this device can be found:

http://www.spansion.com/Support/Datasheets/S25FL128S_256S_00.pdf

eMMC

Leilais avaiable with eMMC Memory, starting from 4Gbytes up to 64GB.
Boot can be done through this device.

http://www.micron.com/products/managed-nand/emmc

2.2 Connectivity

LAN

Leila implements a triple speed 10/100/1000 Mbit/s Ethernet MAC compliant with the IEEE802.3-2002 standard. The MAC layer provides compatibility with half- or full-duplex 10/100 Mbit/s Ethernet LANs and full-duplex gigabit Ethernet LANs.

RGMII Gigabit Ethernet Phy

The KSZ9031RNX is a completely integrated triple-speed (10Base-T/100Base-TX/1000Base-T) Ethernet physical-layer transceiver for transmission and reception of data on standard CAT-5 unshielded twisted pair (UTP) cable.

The KSZ9031RNX provides the reduced gigabit media independent interface (RGMII) for direct connection to RGMII MACs in gigabit Ethernet processors and switches for data transfer at 10/100/1000Mbps.

The KSZ9031RNX reduces board cost and simplifies board layout by using on-chip termination resistors for the four differential pairs and by integrating an LDO controller to drive a low-cost MOSFET to supply the 1.2V core.

The KSZ9031RNX offers diagnostic features to facilitate system bring-up and debugging in production testing and in product deployment. Parametric NAND tree support enables fault detection between KSZ9031 I/Os and the board. The LinkMD® TDR-based cable diagnostic identifies faulty copper cabling. Remote and local loopback functions verify analog and digital data paths.

For more information about the Gigabit Ethernet devices see the following link

http://www.micrel.com/index.php/products/lan-solutions/phys/article/2.html

http://www.micrel.com/index.php/products/lan-solutions/phys/article/2-ksz9031rnx.html

2.3 MULTIMEDIA

3D Graphic Acceleration

i.MX6 incorporates a graphics acceleration GPU 3D Vivante GC2000

- Core Clock in 28HPM (WC-125) 800MHz
- Shader Clock in 28HPM (WC-125) 1000MHz
- Shader Cores 4 (VEC-4) / 16 (Vec-1)
- Pixel Rate 1600(MPixel/sec, no overdraw)
- Shader GFLOPS High/Medium Precision 32
- GPGPU Option 1.1/1.2 Embedded Full

Features for the Quad and Dual Processors:

	iMX6Quad	iMX6Dual
Independent Image Processing Units	2	2
OpenGL® ES 2.0 (88M triangles/s, 1.066G pixel/s)	√	√
Number of OpenGL® Shaders	4	4
Dedicated OpenVG 1.1 accelerator	√	√
OpenVG 1.1	√	√
Windows Direct3D	√	√
OpenCL EP	√	√
16x Line Anti-aliasing	√	√
8K x 8K texture and 8K x 8K rendering target	√	√
Ultra-threaded, unified vertex and fragment shaders	√	√

Features for the Dual Lite and Solo Processors:

	i.MX 6 Dual Lite	iMX6Solo
Independent Image Processing Units	1	1
OpenGL® ES 2.0 (532 M pixel/s)	√	√
Number of OpenGL® Shaders	1	1
Dedicated OpenVG 1.1 accelerator		
OpenVG 1.1	√	√

	i.MX 6 Dual Lite	iMX6Solo
Windows Direct3D	√	√
OpenCL EP		
16x Line Anti-aliasing	√	√
8K x 8K texture and 8K x 8K rendering target	√	√
Ultra-threaded, unified vertex and fragment shaders	√	√

Video Encore/Decore

HD Video Decode

Features for the Quad and Dual Processors:

MPEG-2 (Main, High Profile) – 1080p30, 720p60, (50Mbps)
MPEG4/XviD (Simple, Advanced Simple Profile) – 1080p30 (40Mbps)
H.263 (P0/P3) – 16CIF(1408x1152) 30fps (20Mbps)
H.264 (Constrained Baseline, Baseline, Main, High Profile) – 1080p30, 720p60, (50Mbps)
H.264-MVC (Baseline, Main, High Profile) – 720p60
VC1 (Simple, Main, Advanced Profile) – 1080p30 (45Mbps)
RV (8/9/10) – 1080p30 (40Mbps)
DivX (3/4/5/6) – 1080p30 (40Mbps)
On2 VP6/VP8 – 720p30 (20Mbps)
AVS Jizhun – 1080p30 (40Mbps)
MJPEG (Baseline) – 8192x8192 (120MPixel/s)

Features for the Dual Lite and Solo Processors:

MPEG-2 (Main, High Profile) – 1080p30, 720p60, (50Mbps)
MPEG4/XviD (Simple, Advanced Simple Profile) – 1080p30 (40Mbps)
H.263 (P0/P3) – 16CIF(1408x1152) 30fps (20Mbps)
H.264 (Constrained Baseline, Baseline, Main, High Profile) – 1080p30, 720p60, (50Mbps)
H.264-MVC (Baseline, Main, High Profile) – 720p60
VC1 (Simple, Main, Advanced Profile) – 1080p30 (45Mbps)
RV (8/9/10) – 1080p30 (40Mbps)
DivX (3/4/5/6) – 1080p30 (40Mbps)
On2 VP6/VP8 – 720p30 (20Mbps)
AVS Jizhun – 1080p30 (40Mbps)
MJPEG (Baseline) – 8192x8192 (120MPixel/s)

HD Video Encode

Features for the Quad and Dual Processors:

MPEG4 (Simple Profile) – 720p30 (12Mbps)
H.263 (P0/P3) – 4CIF(704x576) 30fps (8Mbps)
H.264 (Constrained Baseline, Baseline Profile) – 1080p30, (14Mbps)
MJPEG (Baseline) – 8192x8192 (160MPixel/s)

Features for the Dual Lite and Solo Processors:
MPEG4 (Simple Profile) – 720p30 (12Mbps)
H.263 (P0/P3) – 4CIF(704x576) 30fps (8Mbps)
H.264 (Constrained Baseline, Baseline Profile) – 1080p30, (14Mbps)
MJPEG (Baseline) – 8192x8192 (160MPixel/s)

INTERFACES

Type of interface	iMX6Quad	iMX6Dual	i.MX 6 Dual Lite	iMX6Solo
LCD RGB (24bit, 225 Mpixel/s)	1	1	1	1
LVDS (2x single channel 85 Mpxiel/s or 1x dual channel 165 Mpixel/s)	1	1	1	1
HDMI 1.4a (266Mpixel/s)	1	1	1	1
MIPI DSI	1x 2 Data Lanes*	1x 2 Data Lanes*		
Resistive Touch Screen	4 Wire	4 Wire	1	1
Analogue Audio Headphone out	1 (Stereo)	1 (Stereo)	1	1
Analogue Audio Line in	1 (Stereo)	1 (Stereo)	1	1
Analogue Audio Mic in	1 (Mono)	1 (Mono)	1	1
AC97/I2S/SSI	1+2*	1+2*	1	1
ESAI	1*	1*	1	1
S/PDIF	1 in / 1 out	1 in / 1 out	1	1
Parallel Camera Interface (through serdes)	1+1	1+1	1+1	1+1
MIPI CSI-2	1x 4 Data Lanes*	1x 4 Data Lanes*		

Type of interface	iMX6Quad	iMX6Dual	i.MX 6 Dual Lite	iMX6Solo
I2C	3	3	3	3
SPI	2+1*	2+1*	2+1*	2+1*
UART	4+1*	4+1*	4+1*	4+1*
SD/SDIO/MMC	2+1*	2+1*	2+1*	2+1*
GPIO	TBD	TBD	TBD	TBD
USB 2.0 OTG (host/device)	1	1	1	1
USB 2.0 host	2	2	2	2
PCIe (Gen 2.0)	1 Lane	1 Lane		
Serial ATA II (3Gbit/s)	1	1		
10/100/1000 MBit/s Ethernet	1 (IEEE 1588)	1 (IEEE 1588)	1 (IEEE 1588)	1 (IEEE 1588)
PWM	4	4	4	4
CAN	2	2	2	2
MLB	2*	2*	1	1

2.4 POWER SUPPLY

The board must be powered through the power connector, the supply must be 5V +/- 5%

Absolute Maximum Rating

Power Supply	Min	Max	Unit
DC IN (5V power supply)	4.75	5.25	V
Digital IOs: UARTs, LCD, MMC2, ISP, SPI, McBSP,I2C,GPMC, JTAG	-0.3	3.6	V
Analog IOs: AIN0-7	-0.3	3.6	V
RTC Power Supply	-0.3	3.6	

Table 1 Absolute Maximum Characteristics

Operational Characteristics

Power supplies

Power Supply	Min	Typical	Max	Unit
DC IN (5V power supply)	-5 %	5.0	+5%	V

Table 2 Power Supplies Operational Characteristics

Power Consumption

Power Supply	Min	Typical	Max	Unit
Main Power Supply, DC IN		TBD		
RTC backup battery current draw		TBD		

Table 3 Power Consumption

DC Electrical Characteristics

Parameter	Min	Typical	Max	Unit
Digital IOs: UARTs, LCD, MMC2, ISP, SPI, McBSP,I2C,GPMC,JTAG				
Vih	0.7x 3V3		3V3	V
Vil	0		0.3x3V3	V
Voh	3V3 -0.15			V
Vol			0.15	V

Table 4 DC Electrical Characteristics

Environmental Specifications

	Min	Max
Commercial Operating Temperature Range	0	70° C
Extended Operating Temperature Range	-20	70° C
Industrial Operating Temperature Range	-40° C	+85° C

Table 5 Environmental specifications

I2C mapping

Information on I2C address assignments are provided below.

i.MX6 Function	i.MX6 I2C Port	Address
i.MX6 PMIC Control	BUS 2	0x08h
MIPI Control	BUS 2	TDB
HDMI DDC	BUS 2	TDB
RTC	BUS 1	0x51h

Table 6 :I2C Bus Addresses

Connector J1 CPU B2B Connector

- Part Number: Molex FX8-100S-SV(21) 100 pin

PIN	Processor Ball	Ball function Name	Leila function	Notes
1	Na	Na	GND	
2	Na	Na	GND	
3	A3	PCIE_TXM	PCIE_TXM	PCIe Signals (No alternate function)
4	B3	PCIE_RXP	PCIE_RXP	PCIe Signals (No alternate function)
5	B2	PCIE_TXP	PCIE_TXP	PCIe Signals (No alternate function)
6	B1	PCIE_RXM	PCIE_RXM	PCIe Signals (No alternate function)
7	Na	Na	GND	
8	Na	Na	GND	
9	E10	USB_HOST_DP	USB_HOST_DP	USB Host (No alternate function)
10	D7	CLK1_P	CLK1_P	PCIe Clock (No alternate function)
11	F10	USB_HOST_DN	USB_HOST_DN	USB Host (No alternate function)
12	C7	CLK1_N	CLK1_N	PCIe Clock (No alternate function)
13	Na	Na	GND	
14	Na	Na	GND	
15	F9	SD2_CMD	SD2_CMD	SD2 signals
16	W23	ENET_RX_ER	USB_OTG_ID	
17	Na	Na	GND	
18	Na	Na	GND	
19	C21	SD2_CLK	SD2_CLK	SD2 signals
20	A6	USB_OTG_DP	USB_OTG_DP	USB OTG (No alternate function)
21	Na	Na	GND	
22	B6	USB_OTG_DP	USB_OTG_DN	USB OTG (No alternate function)
23	A22	SD2_DATA0	SD2_DATA0	SD2 signals

PIN	Processor Ball	Ball function Name	Leila function	Notes
24	Na	Na	GND	
25	E20	SD2_DATA1	SD2_DATA1	SD2 signals
26	E9	USB_OTG_VBUS	USB_OTG_VBUS	USB OTG (No alternate function)
27	A23	SD2_DATA2	SD2_DATA2	SD2 signals
28	Na	Na	GND	
29	B22	SD2_DATA3	SD2_DATA3	SD2 signals
30	A12	SATA_TXP	SATA_TXP	SATA (No alternate function)
31	A19	NANDF_D4	SD2_DATA4	SD2 signals
32	B12	SATA_TXN	SATA_TXN	SATA (No alternate function)
33	B18	NANDF_D5	SD2_DATA5	SD2 signals
34	Na	Na	GND	
35	E17	NANDF_D6	SD2_DATA6	SD2 signals
36	A14	SATA_RXN	SATA_RXN	SATA (No alternate function)
37	C18	NANDF_D7	SD2_DATA7	SD2 signals
38	B14	SATA_RXP	SATA_RXP	SATA (No alternate function)
39	R2	GPIO_16	GPIO_16	GPIO Signal
40	Na	Na	GND	
41	Na	Na	GND	
42	F18	SD1_DAT3	SD1_DAT3	SD1 1V8 signal (used for WIFI)
43	B16	NANDF_RB0	GPIO6_IO10	GPIO Signal
44	E19	SD1_DAT2	SD1_DAT2	SD1 1V8 signal (used for WIFI)
45	F15	NANDF_CS0	GPIO6_IO11	GPIO Signal
46	C20	SD1_DAT1	SD1_DAT1	SD1 1V8 signal (used for WIFI)
47	C16	NANDF_CS1	GPIO6_IO14	GPIO Signal
48	A21	SD1_DAT0	SD1_DAT0	SD1 1V8 signal (used for WIFI)
49	F17	SD4_DAT2	PWM4	PWM signal
50	Na	Na	GND	
51	B19	SD4_DAT1	PWM3	PWM signal
52	D20	SD1_CLK	SD1_CLK	SD1 1V8 signal (used for WIFI)
53	T25	DISP0_DAT9	PWM2	PWM signal
54	Na	Na	GND	

PIN	Processor Ball	Ball function Name	Leila function	Notes
55	T2	GPIO_9	PWM1	PWM signal
56	B21	SD1_CMD	SD1_CMD	SD1 1V8 signal (used for WIFI)
57	Na	Na	GND	
58		Comes from the KSZ9031RNX	RGMII_LED_ACT	Activity led
59	T3	GPIO_6	I2C3_SDA	I2C signal
60		Comes from the KSZ9031RNX	RGMII_LINK	Link led
61	R7	GPIO_3	I2C3_SCL	I2C signal
62		Comes from the KSZ9031RNX	TXRXM_D	Gigabit TXRXM_D
63	V24	DISP0_DAT22	GPIO5_IO16	GPIO Signal
64		Comes from the KSZ9031RNX	TXRXP_D	Gigabit TXRXP_D
65	H21	EIM_D31	UART3_RTS	Uart Signal
66	Na	Na	GND	
67	D25	EIM_D23	UART3_CTS	Uart Signal
68		Comes from the KSZ9031RNX	TXRXM_C	Gigabit TXRXM_C
69	G22	EIM_D25	UART3_RXD	Uart Signal
70		Comes from the KSZ9031RNX	TXRXP_C	Gigabit TXRXP_C
71	F22	EIM_D24	UART3_TXD	Uart Signal
72	Na	Na	GND	
73	W24	DISP0_DAT23	GPIO5_IO17	GPIO Signal
74		Comes from the KSZ9031RNX	TXRXM_B	Gigabit TXRXP_B
75	C19	SD4_DAT5	UART2_RTS	Uart Signal
76		Comes from the KSZ9031RNX	TXRXP_B	Gigabit TXRXP_B
77	B20	SD4_DAT6	UART2_CTS	Uart Signal

PIN	Processor Ball	Ball function Name	Leila function	Notes
78	Na	Na	GND	
79	E18	SD4_DAT4	UART2_RX	Uart Signal
80			TXRXM_A	Gigabit TXRXP_A
81	D17	SD4_DAT7	UART2_TX	Uart Signal
82			TXRXP_A	Gigabit TXRXP_A
83	R22	DISP0_DAT8	GPIO4_IO29	GPIO Signal
84	Na	Na	GND	
85	Na	Na	GND	
86	B17	SD4_CMD	GPIO7_IO09	GPIO Signal
87	N25	DI0_PIN2	GPIO4_IO18	GPIO Signal
88	D16	NANDF_CS3	GPIO6_IO16	GPIO Signal
89	H5	TAG_TCK	JTAG_TCK	Jtag signals (No alternate function)
90	C17	NANDF_D1	GPIO2_IO01	GPIO Signal
91	G6	JTAG_TDO	JTAG_TDO	Jtag signals (No alternate function)
92	U20	ENET_TXD0	GPIO1_IO30	GPIO Signal
93	Na	Na	GND	
94	Na	Connected to RTC	RTC_BAT	Backup battery pin for RTC
95	C25	EIM_D16	HDMI_DDC_DAT_IN	HDMI signal
96		Connected to PMIC	ON_OFF	ON/OFF BUTTON
97	E22	EIM_EB2	HDMI_DDC_CLK_IN	
98		Connected to PMIC	RESETN	Reset output Active low signal.
99	Na	Na	GND	
100	Na	Na	GND	

Connector J3 CPU B2B Connector

- Part Number: Molex FX8-100S-SV(21) 100 pin

PIN	Processor Ball	Ball function Name	Leila function	Notes
1		Comes from DCDC internal	PWGOOD_CPU	Power good for activating external regulators (active high)
2	G23	EIM_D28	I2C1_SDA	I2C signal
3	A16	NANDF_ALE	GPIO6_IO08	GPIO Signal
4	H20	EIM_D21	I2C1_SCL	I2C signal
5	A20	SD4_DAT3	GPIO2_IO11	GPIO Signal
6	Na	Na	GND	
7	D17	NANDF_D3	GPIO2_IO03	GPIO Signal
8	A17	NANDF_CS2	GPIO6_IO15	GPIO Signal
9	C15	NANDF_CLE	GPIO6_IO07	GPIO Signal
10	A18	NANDF_D0	GPIO2_IO00	GPIO Signal
11	E16	SD4_CLK	GPIO7_IO10	GPIO Signal
12	D18	SD4_DAT0	GPIO2_IO08	GPIO Signal
13	F16	NANDF_D2	GPIO2_IO02	GPIO Signal
14	N19	DI0_DISP_CLK	GPIO4_IO16	GPIO Signal
15	N20	DI0_PIN3	GPIO4_IO19	GPIO Signal
16	N21	DI0_PIN15	GPIO4_IO17	GPIO Signal
17	Na	Na	GND	
18	E15	NANDF_WP	GPIO6_IO09	PWM signal
19	F23	EIM_EB3	CSI1_HSYNC	CSIO_1 Signal Group
20	Na	Na	GND	
21	L20	EIM_DA0	CSI1_DAT09	CSIO_1 Signal Group
22	F25	EIM_A24	CSI1_DAT19	CSIO_1 Signal Group
23	D24	EIM_D18	CSI1_DAT17	CSIO_1 Signal Group
24	G24	EIM_A17	CSI1_DAT12	CSIO_1 Signal Group

PIN	Processor Ball	Ball function Name	Leila function	Notes
25	G20	EIM_D20	CSI1_DAT15	CSIO_1 Signal Group
26	J21	EIM_A23	CSI1_DAT18	CSIO_1 Signal Group
27	G21	EIM_D19	CSI1_DAT16	CSIO_1 Signal Group
28	L21	EIM_DA2	CSI1_DAT07	CSIO_1 Signal Group
29	F21	EIM_D17	CSI1_PIXCLK	CSIO_1 Signal Group
30	J25	EIM_DA1	CSI1_DAT08	CSIO_1 Signal Group
31	J19	EIM_D29	CSI1_VSYNC	CSIO_1 Signal Group
32	K24	EIM_DA3	CSI1_DAT06	CSIO_1 Signal Group
33	E25	EIM_D27	CSI1_DAT13	CSIO_1 Signal Group
34	K21	EIM_EB0	CSI1_DAT11	CSIO_1 Signal Group
35	E23	EIM_D22	CSI1_DAT10	CSIO_1 Signal Group
36	L22	EIM_DA4	CSI1_DAT05	CSIO_1 Signal Group
37	E24	EIM_D26	CSI1_DAT14	CSIO_1 Signal Group
38	L23	EIM_DA5	CSI1_DAT04	CSIO_1 Signal Group
39	Na	Na	GND	
40	Na	Na	GND	
41		EIM_A16	EIM_A16	GPIO Signal
42	J22	EIM_A18	EIM_A18	GPIO Signal
43	G25	EIM_A19	EIM_A19	GPIO Signal
44	R20	DISP0_DAT13	GPIO5_IO7	GPIO Signal
45	G24	EIM_A17	EIM_A17	GPIO Signal
46	W21	ENET_RXD0	GPIO1_IO27	GPIO Signal
47	J24	EIM_OE	PCIE_DIS_B	GPIO Signal
48	T24	DISP0_DAT13	GPIO5_IO6	GPIO Signal
49	P3	CSI0_DATA_EN	PCIE_WAKE_B	GPIO Signal
50	P25	DI0_PIN4	GPIO4_IO20	GPIO Signal
51	R1	GPIO_17	PCIE_RST_B	GPIO Signal
52	Na	Na	RESET_IN#	Reset input active low
53	Na	Na	GND	
54	R25	DISP0_DAT5	CSPI3_CS2	SPI Signal

PIN	Processor Ball	Ball function Name	Leila function	Notes
55	T5	GPIO_0	GPIO_0_CLKO	GPIO Signal
56	P20	DISP0_DAT4	CSPI3_CS1	SPI Signal
57	R21	DISP0_DAT10	GPIO4_IO31	GPIO Signal
58	P22	DISP0_DAT1	CSPI3_MOSI	SPI Signal
59	W20	ENET_TXD1	GPIO1_IO29	GPIO Signal
60	P23	DISP0_DAT2	CSPI3_MISO	SPI Signal
61	R24	DISP0_DAT7	GPIO4_IO28	GPIO Signal
62	P24	DISP0_DAT0	CSPI3_CLK	SPI Signal
63	U25	DISP0_DAT14	GPIO5_IO8	GPIO Signal
64	R23	DISP0_DAT6	CSPI3_CS3	SPI Signal
65	T23	DISP0_DAT11	GPIO5_IO5	GPIO Signal
66	Na	Na	GND	
67	Na	Na	GND	
68	P5	GPIO_19	AUDIO_RESETn	Codec audio Reset active low
69	T21	DISP0_DAT16	CSPI2_MOSI	SPI Signal
70	T20	DISP0_DAT21	AUD4_TXD	Audio Signal Group
71	K20	EIM_RW	CSPI2_CS0	SPI Signal
72	U22	DISP0_DAT20	AUD4_TXC	Audio Signal Group
73	U24	DISP0_DAT17	CSPI2_MISO	SPI Signal
74	U23	DISP0_DAT19	AUD4_RXD	Audio Signal Group
75	H24	EIM_CS0	CSPI2_CLK	SPI Signal
76	V25	DISP0_DAT18	AUD4_FSX	Audio Signal Group
77	T22	DISP0_DAT15	CSPI2_CS1	SPI Signal
78	Na	Na	GND	
79	Na	Na	GND	

PIN	Processor Ball	Ball function Name	Leila function	Notes
80	L1	CSI0_DAT13	CSI0_DAT13	CSIO_0 Signal Group
81	M6	CSI0_DAT18	CSI0_DAT18	CSIO_0 Signal Group
82	M2	CSI0_DAT12	CSI0_DAT12	CSIO_0 Signal Group
83	N5	CSI0_DAT09	CSI0_DAT09	CSIO_0 Signal Group
84	L6	CSI0_DAT19	CSI0_DAT19	CSIO_0 Signal Group
85	L3	CSI0_DAT17	CSI0_DAT17	CSIO_0 Signal Group
86	L4	CSI0_DAT16	CSI0_DAT16	CSIO_0 Signal Group
87	M3	CSI0_DAT11	CSI0_DAT11	CSIO_0 Signal Group
88	M5	CSI0_DAT15	CSI0_DAT15	CSIO_0 Signal Group
89	M4	CSI0_DAT14	CSI0_DAT14	CSIO_0 Signal Group
90	P4	CSI0_MCLK	CSI0_HSYNCH	CSIO_0 Signal Group
91	N6	CSI0_DAT08	CSI0_DAT08	CSIO_0 Signal Group
92	P2	CSI0_DAT05	CSI0_DAT05	CSIO_0 Signal Group
93	N4	CSI0_DAT06	CSI0_DAT06	CSIO_0 Signal Group
94	M1	CSI0_DAT10	CSI0_DAT10	CSIO_0 Signal Group
95	N3	CSI0_DAT07	CSI0_DAT07	CSIO_0 Signal Group
96	P1	CSI0_PIXCLK	CSI0_PIXCLK	CSIO_0 Signal Group
97	N2	CSI0_VSYNCH	CSI0_VSYNCH	CSIO_0 Signal Group
98	N1	CSI0_DAT04	CSI0_DAT04	CSIO_0 Signal Group
99	Na	Na	GND	
100	Na	Na	GND	

Connector J9 B2B Connector

- Part Number: Molex FX8-100S-SV(21) 100 pin

PIN	Processor Ball	Ball function Name	Leila function	Notes
1	Na	Na	GND	
2	Na	Na	5V	5V power supply
3	Na	Na	GND	
4	Na	Na	5V	5V power supply
5	Na	Na	GND	
6	Na	Na	5V	5V power supply
7	Na	Na	GND	
8	Na	Na	5V	5V power supply
9	Na	Na	GND	
10	Na	Na	5V	5V power supply
11	Na	Na	GND	
12	Na	Na	5V	5V power supply
13	F4	CSI_CLK0M	CSI_CLK0M	
14	Na	Na	GND	
15	F3	CSI_CLK0P	CSI_CLK0P	MIPI CSI signal
16	H3	DSI_CLK0M	DSI_CLK0M	DSI CSI signal
17	Na	Na	GND	
18	H4	DSI_CLK0P	DSI_CLK0P	DSI CSI signal
19	E4	CSI_D0M	CSI_D0M	MIPI CSI signal
20	Na	Na	GND	MIPI CSI signal
21	E3	CSI_D0P	CSI_D0P	MIPI CSI signal
22	G2	DSI_D0M	DSI_D0M	DSI CSI signal
23	Na	Na	GND	
24	G1	DSI_D0P	DSI_D0P	DSI CSI signal
25	D1	CSI_D1M	CSI_D1M	MIPI CSI signal
26	Na	Na	GND	

PIN	Processor Ball	Ball function Name	Leila function	Notes
27	D2	CSI_D1P	CSI_D1P	MIPI CSI signal
28	H2	DSI_D1M	DSI_D1M	DSI CSI signal
29	Na	Na	GND	
30	H1	DSI_D1P	DSI_D1P	DSI CSI signal
31	E1	CSI_D2M	CSI_D2M	MIPI CSI signal
32	Na	Na	GND	
33	E2	CSI_D2P	CSI_D2P	MIPI CSI signal
34	U2	LVDS0_TX0_N	LVDS0_TX0_N	LVDS0 Signal
35	Na	Na	GND	
36	U1	LVDS0_TX0_P	LVDS0_TX0_P	LVDS0 Signal
37	F2	CSI_D3M	CSI_D3M	MIPI CSI signal
38	Na	Na	GND	
39	F1	CSI_D3P	CSI_D3P	MIPI CSI signal
40	U4	LVDS0_TX1_N	LVDS0_TX1_N	LVDS0 Signal
41	Na	Na	GND	
42	U3	LVDS0_TX1_P	LVDS0_TX1_P	LVDS0 Signal
43	K1	HDMI_HPD	HDMI_HPD	HDMI Signal
44	Na	Na	GND	
45	W4	KEY_ROW2	HDMI_CEC_IN	HDMI Signal
46	U2	LVDS0_TX2_N	LVDS0_TX2_N	LVDS0 Signal
47	T7	KEY_ROW3	I2C2_SDA	I2C Signal
48	U1	LVDS0_TX2_P	LVDS0_TX2_P	LVDS0 Signal
49	U5	KEY_COL3	I2C2_SCL	I2C Signal
50	Na	Na	GND	
51	Na	Na	GND	
52	V4	LVDS0_CLK_N	LVDS0_CLK_N	LVDS0 Signal
53	J6	HDMI_CLKP	HDMI_CLKP	HDMI Signal

PIN	Processor Ball	Ball function Name	Leila function	Notes
54	V3	LVDS0_CLK_P	LVDS0_CLK_P	LVDS0 Signal
55	J5	HDMI_CLKM	HDMI_CLKM	HDMI Signal
56	Na	Na	GND	
57	Na	Na	GND	
58	W2	LVDS0_TX3_N	LVDS0_TX3_N	LVDS0 Signal
59	K6	HDMI_D0P	HDMI_D0P	HDMI Signal
60	W1	LVDS0_TX3_P	LVDS0_TX3_P	LVDS0 Signal
61	K5	HDMI_D0M	HDMI_D0M	HDMI Signal
62	Na	Na	GND	
63	Na	Na	GND	
64	Y1	LVDS1_TX0_N	LVDS1_TX0_N	LVDS1 Signal
65	J4	HDMI_D1P	HDMI_D1P	HDMI Signal
66	Y2	LVDS1_TX0_P	LVDS1_TX0_P	LVDS1 Signal
67	J3	HDMI_D1M	HDMI_D1M	HDMI Signal
68	Na	Na	GND	
69	Na	Na	GND	
70	AA2	LVDS1_TX1_N	LVDS1_TX1_N	LVDS1 Signal
71	K4	HDMI_D2P	HDMI_D2P	HDMI Signal
72	AA1	LVDS1_TX1_P	LVDS1_TX1_P	LVDS1 Signal
73	K3	HDMI_D2M	HDMI_D2M	HDMI Signal
74	Na	Na	GND	
75	Na	Na	GND	
76	AB1	LVDS1_TX2_N	LVDS1_TX2_N	LVDS1 Signal
77	W5	KEY_COL0	UART4_TX	UART Signal
78	AB2	LVDS1_TX2_P	LVDS1_TX2_P	LVDS1 Signal
79	V6	KEY_ROW0	UART4_RX	UART Signal
80	Na	Na	GND	

PIN	Processor Ball	Ball function Name	Leila function	Notes
81	U7	KEY_COL1	UART5_TX	UART Signal
82	Y3	LVDS1_CLK_N	LVDS1_CLK_N	LVDS1 Signal
83	U6	KEY_ROW1	UART5_RX	UART Signal
84	Y4	LVDS1_CLK_P	LVDS1_CLK_P	LVDS1 Signal
85	Na	Na	GND	
86	Na	Na	GND	
87	R3	GPIO_7	CAN_TX_1	CAN Signal
88	AA3	LVDS1_TX3_N	LVDS1_TX3_N	LVDS1 Signal
89	R5	GPIO_8	CAN_RX_1	CAN Signal
90	AA4	LVDS1_TX3_P	LVDS1_TX3_P	LVDS1 Signal
91	T6	KEY_COL4	CAN_TX_2	CAN Signal
92	Na	Na	GND	
93	V5	KEY_ROW4	CAN_RX_2	CAN Signal
94			NC	Not Connected. Do not connect.
95	N22	EIM_BCLK	GPIO6_IO31	GPIO Signal
96	G5	JTAG_TDI	JTAG_TDI	JTAG Signal
97	R6	GPIO_4	SD2_CD_B	SD2 Card detect
98	C3	JTAG_TMS	JTAG_TMS	JTAG Signal
99	R4	GPIO_5	SD1_CD_B	SD1 Card detect
100	C2	JTAG_nTRST	JTAG_nTRST	JTAG Signal

Connector J5 Service connector

- *Part Number: MOLEX 502386-1470*

PIN	Leila function	Notes
1	JTAG_nTRST	Jtag Reset
2	JTAG_TMS	Jtag test mode
3	JTAG_nSRST	Jtag Sistem reset
4	JTAG_TDI	Jtag Test data input
5	JTAG_TDO	Jtag Test data output
6	JTAG_RTCK	Jtag RTCK
7	JTAG_TCK	Jtag TCK
8	JTAG_DE	Not used
9	JTAG_DACK	Not used
10	GND	Ground signal
11	UART2_RX	Serial Console RX
12	UART2_TX	Serial Console TX
13	3V3	3,3V power
14	GND	Ground signal

Connector J6 USB OTG

- *Part Number: MOLEX 67803-8020 MINI USB OTG STANDARD*

Boot modes

Leila has two boot configurations that are differentated in Two different part Numbers:

1. EMMC Board Configuration
    - Emmc (channel 3) or
    - SD2 Channel (J4 connector)
2. SPI NOR Board configurations
    - SPI NOR boot (filesystem present in eMMC)
    - SD2 Channel (J4 connector)

EMMC Board Configuration:
The boot channel is selected by closing the J8 (jumper or NOT):

BOOT Device	J8 configuration	Comments
Emmc (channel 3)	Open	Boot from eMMC
SD2 Channel	Closed	Boot from external SD

SPI Board Configuration:
The boot channel is selected by closing the J8 (jumper or NOT):

BOOT Device	J8 configuration	Comments
SPI NOR	Open	Bootloader and Kernel present. Filesystem is on EMMC o External SD
SD2 Channel	Closed	Boot from external SD

BOARD TOP VIEW

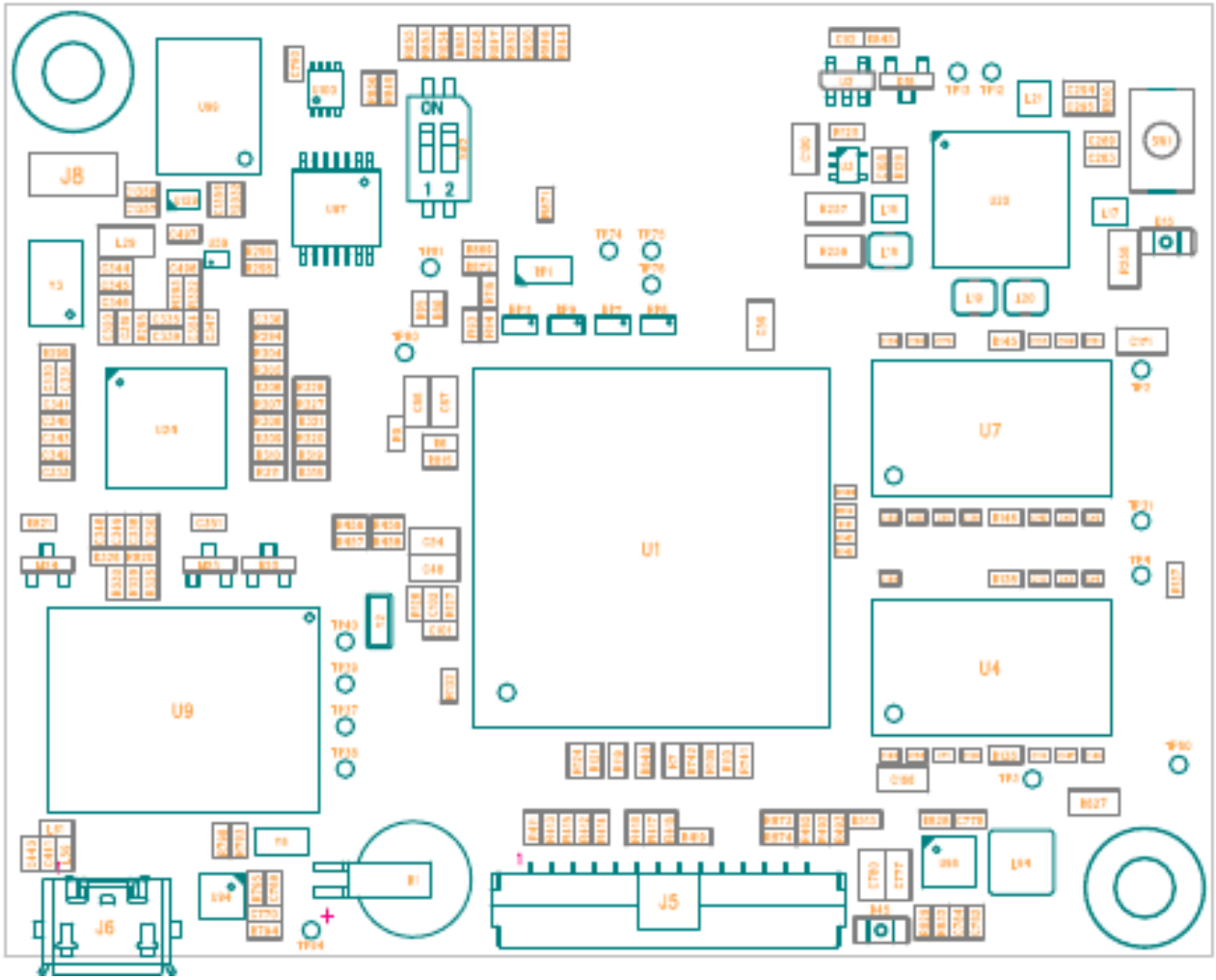

BOARD BOTTOM VIEW

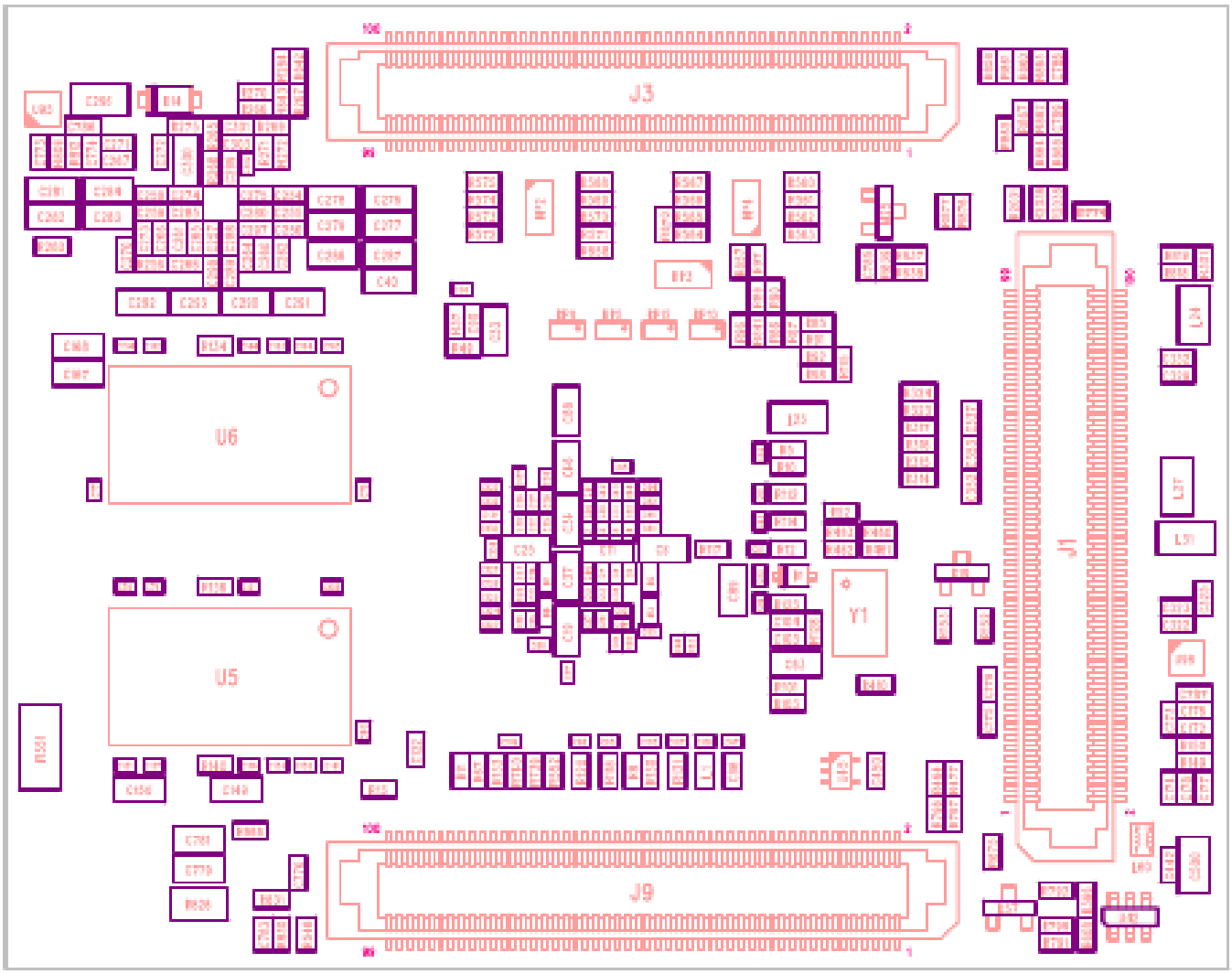

Rohs compliance

The Leila Board comply with the European Union's Directive 2002/95/EC: "Restrictions of Hazardous Substances".

Warranty Terms

MAS Elettronica guarantees hardware products against defects in workmanship and material for a period of one (1) year from the date of shipment. Your sole remedy and MAS Elettronica's sole liability shall be for MAS Elettronica, at its sole discretion, to either repair or replace the defective hardware product at no charge or to refund the purchase price. Shipment costs in both directions are the responsibility of the customer. This warranty is void if the hardware product has been altered or damaged by accident, misuse or abuse.

Disclaimer of Warranty
THIS WARRANTY IS MADE IN LIEU OF ANY OTHER WARRANTY, WHETHER EXPRESSED, OR IMPLIED, OF MERCHANTABILITY, FITNESS FOR A SPECIFIC PURPOSE, NON-INFRINGEMENT OR THEIR EQUIVALENTS UNDER THE LAWS OF ANY JURISDICTION, EXCEPT THE WARRANTY EXPRESSLY STATED HEREIN. THE REMEDIES SET FORTH HEREIN SHALL BE THE SOLE AND EXCLUSIVE REMEDIES OF ANY PURCHASER WITH RESPECT TO ANY DEFECTIVE PRODUCT.
Limitation on Liability
UNDER NO CIRCUMSTANCES SHALL MAS ELETTRONICA BE LIABLE FOR ANY LOSS, DAMAGE OR EXPENSE SUFFERED OR INCURRED WITH RESPECT TO ANY DEFECTIVE PRODUCT. IN NO EVENT SHALL MAS ELETTRONICA BE LIABLE FOR ANY INCIDENTAL OR CONSEQUENTIAL DAMAGES THAT YOU MAY SUFFER DIRECTLY OR INDIRECTLY FROM USE OF ANY PRODUCT.

DISCLAIMER:

CONTACT INFORMATION

Mas Elettronica Sas
Via Rossi 1
35030 Rubano (PD)
Italy.
Tel +39 0498687469
Fax +39 0498687469

Sales : sm@maselettronica.com
Support: support@maselettronica.com

www.maselettronica.com