TELICA
Carrier Board -
Hardware Manual

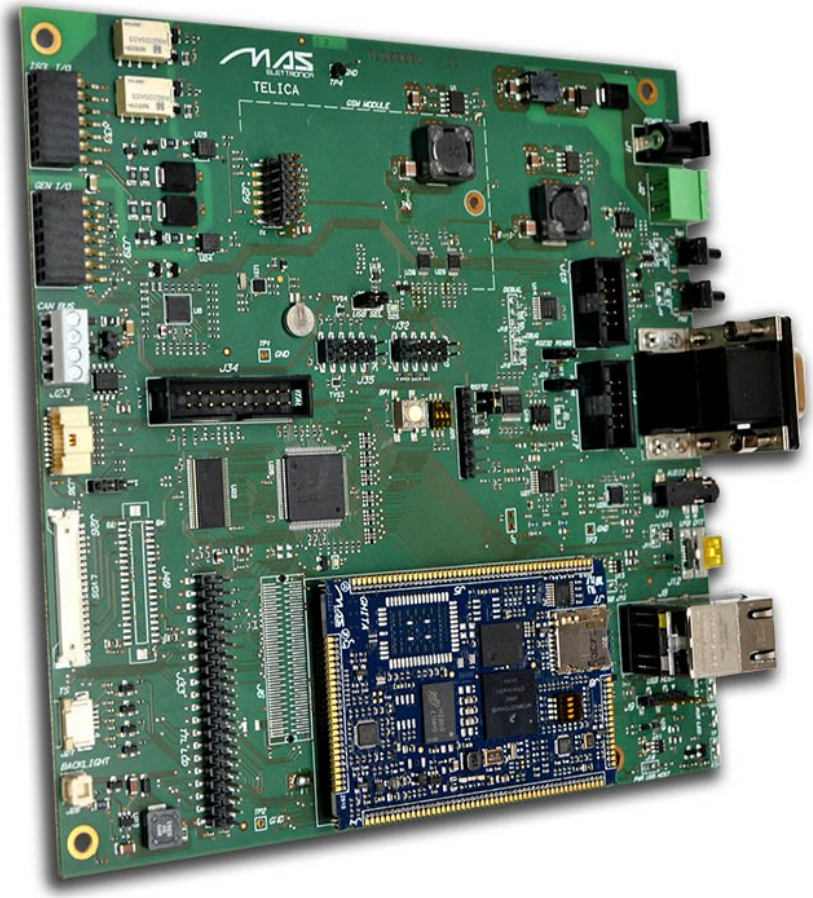

Mas Elettronica Sas
Via Risorgimento 16/C
35030 Selvazzano Dentro (PD)
Italy.

Revision History

Date	Revision	Description	Author(s)
28/12/15	1.0	First Release	S.Mascetti

Sommario

Introduction

Telica is a carrier board made for Mas CPU Modules Fiamma and Ghita. It is designed to meet a wide variety of applications starting from automotive, industrial, entertainment etc.

Features

LCD and touch screen interface

The LCD interface supports TTL, LVDS.

Displays supported

5,7”	640x480 (Fiamma/Ghita module)
7”	800x480 (Fiamma/Ghita module)
10,1”	1024x800 (Fiamma Module)
15”	720p (Fiamma Module)
17”	1080p (Fiamma Module)

Other sizes and screen resolutions are supported.

Touch screen interface supports both resistive 4 wires and capacitive touch screens.

Backlight circutry for LED based displays.

Serial Interfaces, USB and CAN Bus

Supported dual RS232, serial interfaces.
RS485
One complete USB 2.0 host interface.
One complete USB 2.0 OTG interface.
One complete CAN 2.0 interface.
One I2C 3,3V interface
One SPI 3,3V interface

Wireless interfaces

Wi-Fi and Bluetooth integrated on TiWi BLE module when present on the CPU Module.

Dual Ethernet

One Ethernet 10/100Mbit/s

Audio In and Out

Audio input

Line in input
Microphone input
Audio output amplified two 1,5 W 8Ohm speaker

I/O Interface

Two isolated inputs.
Two Relè ouputs
Seven Generic I/O

RTC

One RTC Real time clock interface with battery Backup.

Wireless 3G Viky module

Telica provides an interface for the Viky GSM/3G MAS Module.

Power Supply

Telica provides two methods of supplying power to the board:

- The connector J1, which is a standard 5.5mm power jack barrel connector which is widely used in consumer electronic devices.
- The connector J2, which is a pluggable, dual-pin male type Phoenix terminal block which is widely used in industrial applications.

Both the connectors have a wide input voltage range of 7V-28V DC
The input voltage must be 12V +/-10%.
The on-board power supply provides the following supplies (maximum power).
5V / 3A (15W)
3.3V / 3A (9,9W)
The supply is protected against reverse input voltage polarity and short circuits.

Dimensions

170 mm x 170 mm MINI-ITX Form Factor.

Quick-Start Instructions

Perform the following steps to quick-start the Telica carrier board:

- Insert the CPU Module (Ghita or Fiamma).
- Connect the Serial debug connector povided with the board.
- Open a Serial Terminal:

Configure Konsole

Open, for example, GtkTerm console and click configuration. Click on port and set the serial parameter in the following way:

Port: /dev/ttyUSB0
BaudRate: 115200
Parity: None
Bits: 8
Stopbits: 1
Flow control: none

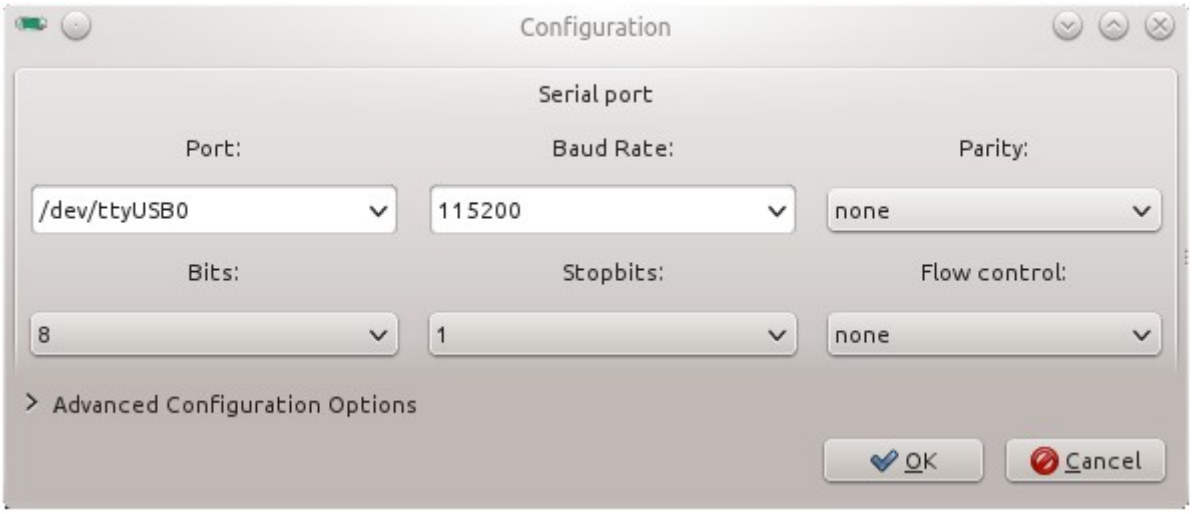

- Connect an external power supply to the board by using connectors J1, J2 (12V24W recommended).
- Turn on the external power supply.
- Push down the power ON button PB1 on Telica and the pre-installed operating system boots. You should see the messages from the bootloader and kernel on the Serial console.

For a detailed documentation of the software as well as for the newest boot loader and software images please refer to the Maselettronica's Developer Website or the support mail: support@maselettronica.com

Reference Documents

For detailed technical information about suitable computer modules, please refer to the documents listed below.

Fiamma Hardware manual

http://maselettronica.com/wp-content/uploads/FIAMMA-MCAM335x-Hardware-Manual-Rev.1.1.pdf

Fiamma PRU Application Note

http://maselettronica.com/wp-content/uploads/Application-Note-PRU.pdf

Fiamma Hardware manual

http://maselettronica.com/wp-content/uploads/GHITA-IMX28x-Hardware-Manual-Rev.-1.1.pdf

Telica block Diagram

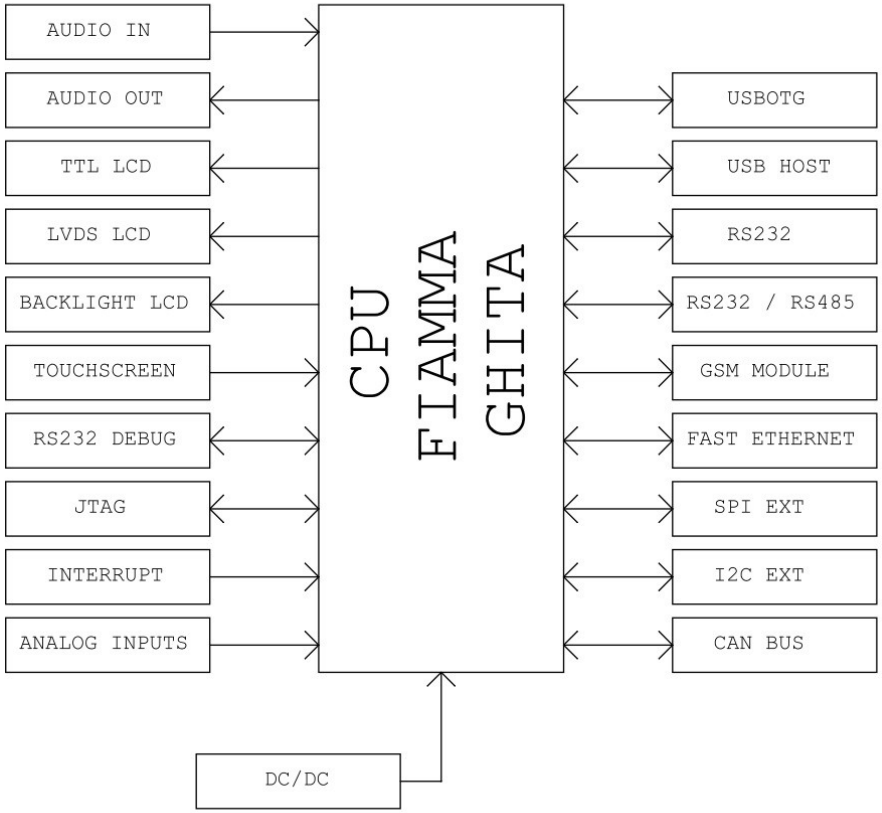

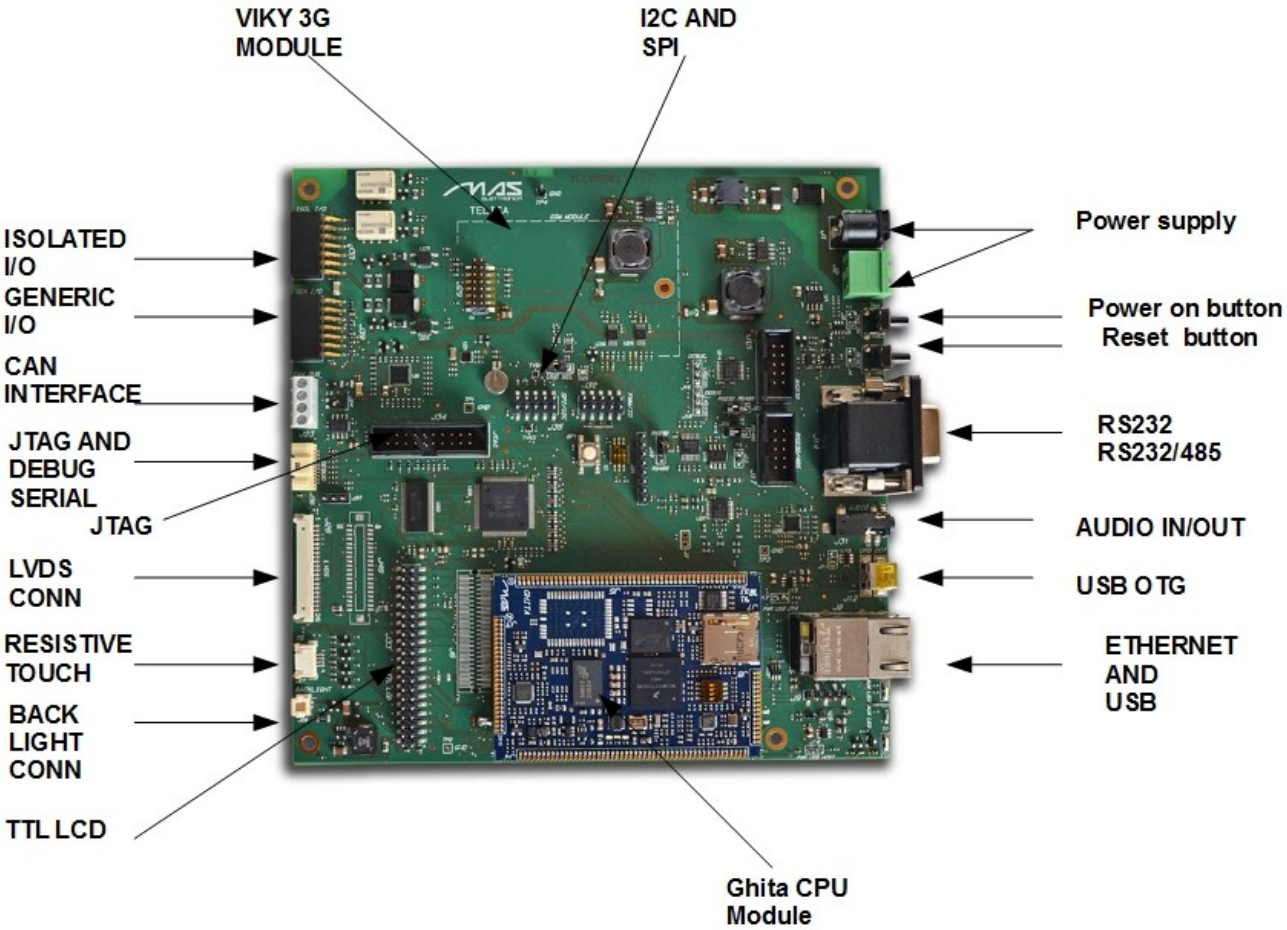

Connector Layout

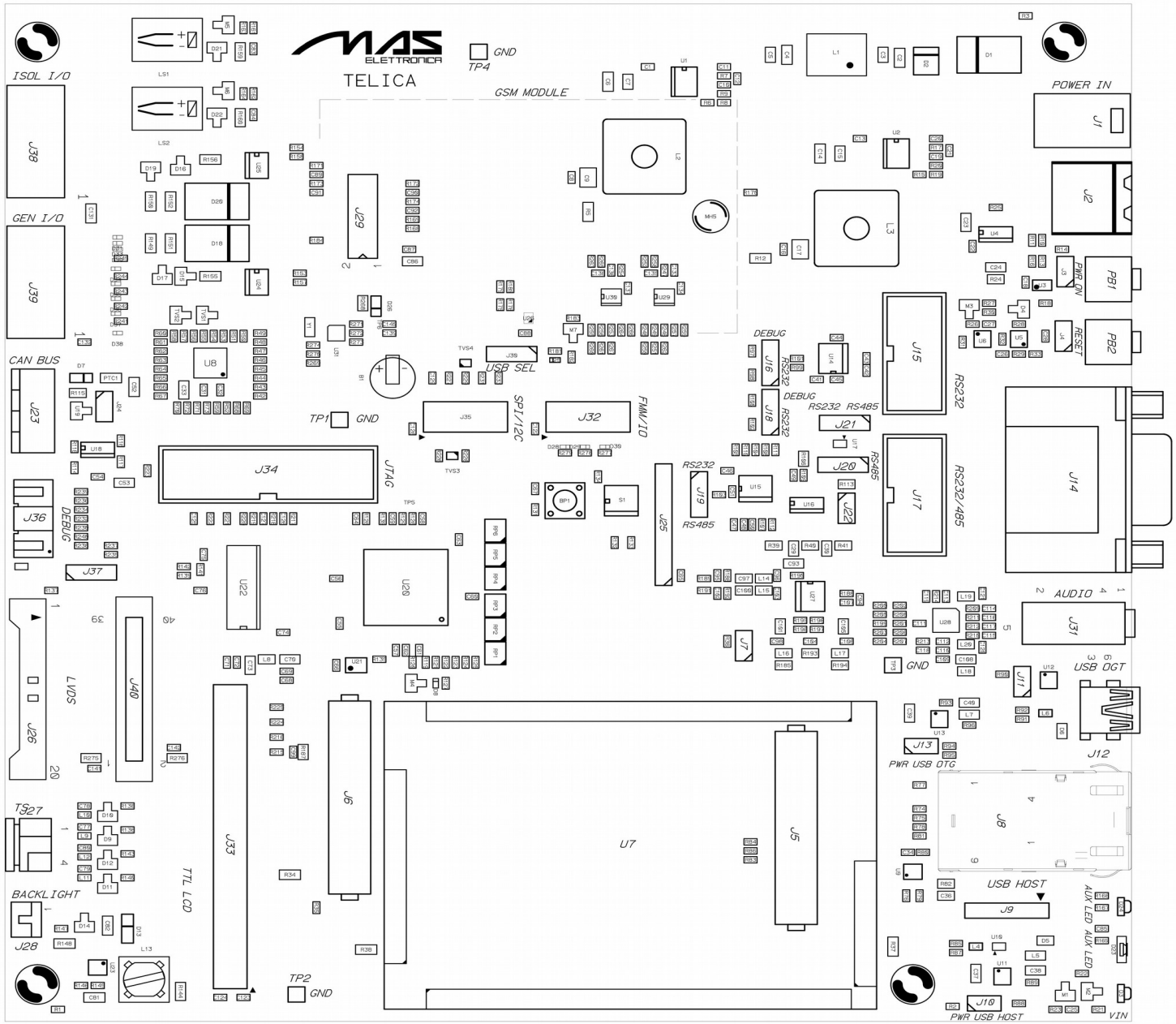
MAS ELETTRONICA
TELICA
GSM MODULE
ISOL I/O
GEN I/O
CAN BUS
POWER IN
DEBUG
USB SEL
SPI/I2C
FMW-IO
JTAG
RS232
RS485
RS232/485
AUDIO
USB OGT
PWR USB OTG
USB HOST
PWR USB HOST
LVDS
TTL LCD
BACKLIGHT
AUX LED
VIN
GND
TP1
TP2
TP4
PWR ON
RESET

Connector Description

J1 and J2 Power connectors

Telica has Two power connectors:

J1 Jack connector

Part Number: PJ-037A

PIN Number	Name	Description
1	Vin	9-36V Board Power Input
2	GND_IN	Ground refernce for the Board.

J2 Terminal Block

Part Number:** 3705171 **Phoenix Contact

PIN Number	Name	Description
1	Vin	9-36V Board Power Input
2	GND_IN	Ground refernce for the Board.

J3 Power Button or PB1

Part Number: TLW-102-06-T-S Samtec

PIN Number	Name	Description
1	PWRON	Power on button
2	GND	Ground refernce for the Board.

J4 Reset CONN

Part Number: TLW-102-06-T-S Samtec

PIN Number	Name	Description
1	MANUAL RESET	Manual Reset of the system
2	GND	Ground refernce for the Board.

J8 ETHERNET + USB COMBO

Part Number: 0821-1X1T-36-F Bel Fuse

This connectors have standard pinout.

LED	Description
Yellow	100 Speed.
Orange	Link and activity.

J9 USB Host Strip connector

Part Number: TSM-105-02-L-SV Samtec

PIN Number	Name	Description
1	VBUS	5V USB VBUS
2	D-	Data Negative signal
3	D+	Data Positive signal
4	GND	Ground refernce for the Board.
5	NC	Not conntected

J10 ENABLE POWER USB HOST Jumper

Part Number: LW-102-06-T-S Samtec

Jumper	Description
ON	Disable 5V USB
OFF	Enable 5V USB

J11 USB OTG ID Jumper

Part Number: LW-102-06-T-S Samtec

Jumper	Description
ON	USB OTG configured as a Host
OFF	USB OTG configured as a Device

J12 USB OTG/2.0

Part Number: 67803-8020 Molex

PIN Number	Name	Description
1	VBUS	5V USB VBUS
2	D-	Data Negative signal
3	D+	Data Positive signal
4	ID	ID Otg Signal.
5	GND	Ground refernce for the Board.

J13 ENABLE POWER USB OTG Jumper

Part Number: LW-102-06-T-S Samtec

Jumper	Description
ON	Disable 5V USB OTG (Device Mode)
OFF	Enable 5V USB OTG (host Mode)

J14 RS232/RS485 DOUBLE DB9

Part Number: 178-009-513R571 Molex

PIN	NAme	Description
1A	NC	Not Connected
2A	TX	Trasmit Signal
3A	RX	Receive Signal
4A	NC	Not Connected
5A	GND	Ground refernce for the Board.
6A	NC	Not Connected
7A	NC	Not Connected
8A	NC	Not Connected
9A	NC	Not Connected
1B	NC	Not Connected
2B	TX	Trasmit signal RS232 or RS485 Neg sognal
3B	RX	Receive Signal RS232 or RS485 positive signal
4B	NC	Not Connected
5B	GND	Ground refernce for the Board.
6B	NC	Not Connected
7B	CTS	Signal CTS RS232
8B	RTS	Signal RTS RS232
9B	NC	Not Connected

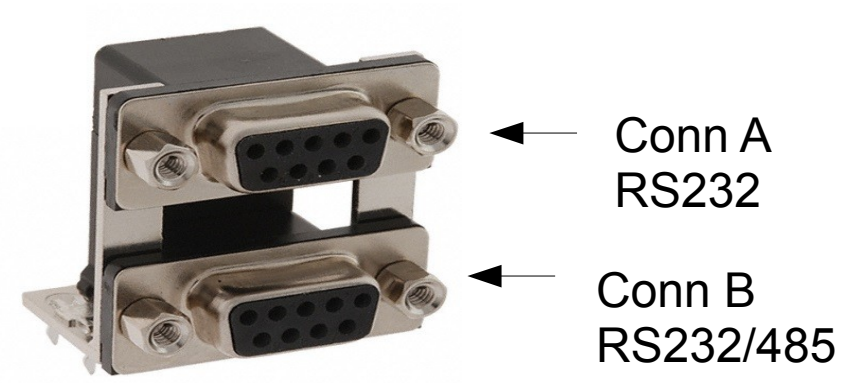

RS232/485 Selection

The selection between RS232 and RS485 is done through 3 Jumpers. Te following table resumes how to configure the serial in RS232 or RS485 mode:

Function	J19 position	J20 position	J21 position	J22 position
RS232	1-2	2-3	2-3	OFF
RS485	2-3	1-2	1-2	ON

J15 RS232 (Alternative to J14A) 2x5 2,54mm Headers

Part Number: T821110A1S100CEU Amphenol

PIN Number	Name	Description
1	NC	Not Connected
2	TX	Trasmit signal
3	RX	Receive Signal
4	NC	Not Connected
5	GND	Ground refernce for the Board.
6	NC	Not Connected
7	NC	Not Connected
8	NC	Not Connected
9	NC	Not Connected
10	NC	Not Connected

J17 RS232/RS485 (Alternative to J14B) 2x5 2,54mm Headers

Part Number: T821110A1S100CEU Amphenol

PIN Number	Name	Description
1	NC	Not Connected
2	TX	Trasmit signal RS232 or RS485 Neg sognal
3	RX	Receive Signal RS232 or RS485 positive signal
4	NC	Not Connected
5	GND	Ground refernce for the Board.
6	NC	Not Connected
7	NC	Not Connected
8	NC	Not Connected
9	NC	Not Connected
10	NC	Not Connected

J23 USB OTG/2.0

Part Number: KRMC 04 Lumberg

PIN Number	Name	Description
1	5V Can Bus	5V for CAN BUS
2	CANH	Data H signal
3	CANL	Data L signal
4	GND	Ground refernce for the Board.

J24 CAN BUS TERMINATOR Jumper

Part Number: LW-102-06-T-S Samtec

Jumper	Description
ON	Enable termination
OFF	Disable termination

J25 CPLD JTAG

Part Number: TSW-108-24-T-S Samtec

PIN Number	Name	Description
1	VCC	Power supply 3,3V
2	TDO	TDO cpld Jtag signal
3	TDI	TDI cpld Jtag signal
4	NC	Not Connected
5	NC	Not Connected
6	TMS	TMS cpld Jtag signal
7	GND	Ground refernce for the Board.
8	TCK	TCK cpld Jtag signal

J27 TOUCH SCREEN 4WIRE

Part Number: 52207-0485 Molex

PIN	NAME	DESCRIPTION
1	Top	TOP SIGNAL
2	RIGHT	RIGHT SIGNAL
3	BOTTOM	BOTTOM SIGNAL
4	LEFT	LEFT SIGNAL

J26 LCD LVDS interface

Part Number: 53780-2070 Molex

PIN	NAME	DESCRIPTION
1	5V	5V POWER SUPPLY
2	5V	5V POWER SUPPLY
3	RIN3+	LVD POSITIVE CH3
4	RIN3-	LVDS NEGATIVE CH3
5	DIM	BACKLIGHT PWM0 DIMMING
6	3V3	3,3V POWER SUPPLY
7	3V3	3,3V POWER SUPPLY
8	GND	Board Ground
9	GND	Board Ground
10	CLKIN+	LVDS POSITIVE CLOCK
11	CLKIN-	LVDS NEGATIVE CLOCK
12	GND	Board Ground
13	RIN2+	LVDS POSITIVE CH2
14	RIN2-	LVDS NEGATIVE CH2
15	GND	Board Ground
16	RIN1+	LVDS POSITIVE CH1
17	RIN1-	LVDS NEGATIVE CH1
18	GND	Board Ground
19	RIN0+	LVDS POSITIVE CH0
20	RIN0-	LVDS NEGATIVE CH0

J40 LCD LVDS interface (Alternative conn)

Part Number: DF13A-40DP-1.25V(55) Hirose

DESCRIPTION	Name	PIN	PIN	Name	DESCRIPTION
5V POWER SUPPLY	5V	1	2	3V3	3,3V POWER SUPPLY
5V POWER SUPPLY	5V	3	4	3V3	3,3V POWER SUPPLY
Non collegati	NC	5	6	NC	Not Connected
BACKLIGHT PWM0	DIM	7	8	NC	Not Connected

DESCRIPTION	Name	PIN	PIN	Name	DESCRIPTION
DIMMING					
Board Ground	GND	9	10	GND	Board Ground
Non collegati	NC	11	12	NC	Not Connected
Non collegati	NC	13	14	NC	Not Connected
Board Ground	GND	15	16	GND	Board Ground
Non collegati	NC	17	18	NC	Not Connected
Non collegati	NC	19	20	NC	Not Connected
Board Ground	GND	21	22	GND	Board Ground
LVDS NEGATIVE CH0	RIN0-	23	24	NC	Not Connected
LVDS POSITIVE CH0	RIN0+	25	26	NC	Not Connected
Board Ground	GND	27	28	GND	Board Ground
LVDS NEGATIVE CH1	RIN1-	29	30	RIN3-	LVDS NEGATIVE CH3
LVDS POSITIVE CH1	RIN1+	31	32	RIN3+	LVD POSITIVE CH3
Board Ground	GND	33	34	GND	Board Ground
LVDS NEGATIVE CH2	RIN2-	35	36	CLKIN-	LVDS NEGATIVE CLOCK
LVDS POSITIVE CH2	RIN2+	37	38	CLKIN+	LVDS POSITIVE CLOCK
Board Ground	GND	39	40	GND	Board Ground

J28 BAKCLIGHT LCD

Part Number: 5023860270 Molex

PIN	NAME	DESCRIPTION
1	BCK_LIGHT P	Positive power signal
2	BCK_LIGHT N	Negative power signal.

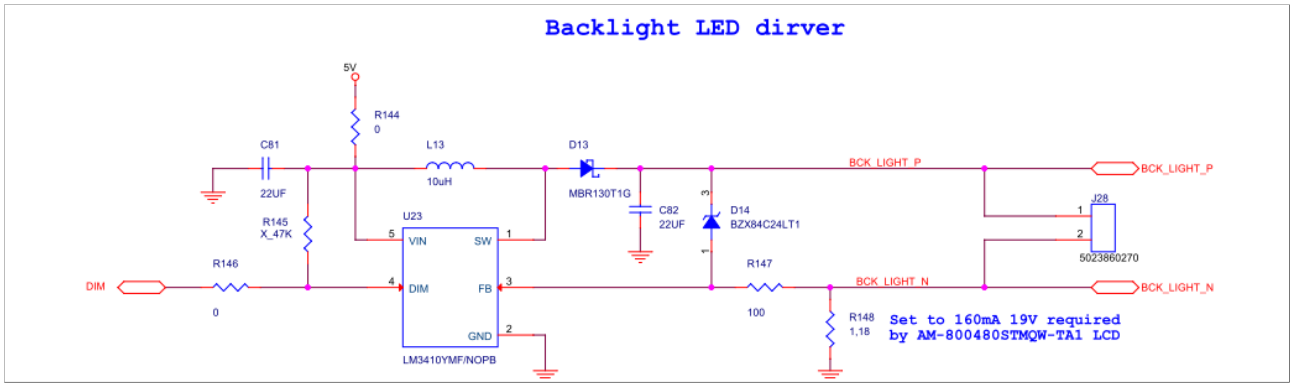

Backlight LED Circuit

J29 3G GSM MODULE

Part Number: TW-07-03-L-D-250 Samtec

DESCRIPTION	Name	PIN	PIN	Name	DESCRIPTION
Power supply GSM module	VIN	1	2	AUDIO OUT +	GSM Audio positive out
Power supply GSM module	VIN	3	4	AUDIO OUT -	GSM Audio negative out
USB BUS positive data signal	USB DP	5	6	GND	Board Ground
USB BUS Negative data signal	USB DM	7	8	AUDIO IN +	GSM Audio input negative
GSM module GPIO generic	GSM_GPIO	9	10	AUDIO IN -	GSM Audio input positive
HW reset of GSM module	GSM_RST#	11	12	GSM_PWR_ ON#	Power on, GSM Module
Board Ground	GND	13	14	EN_GSM_P WR#	Enable GSM module Power supply

J30 Usb Selector GSM/HOST Jumper

Part Number: LW-102-06-T-S Samtec

Jumper	Description
ON	USB To host connector
OFF	USB to GSM Module.

J31 Audio

Part Number: SJ-43514-SMT-TR Cui inc.

PIN	NAME	DESCRIPTION
1	MIC	Microphone input
2	SPK_L	Amplified Speaker left out
3	SPK_R	Amplified Speaker right out
4	GND	Board Ground

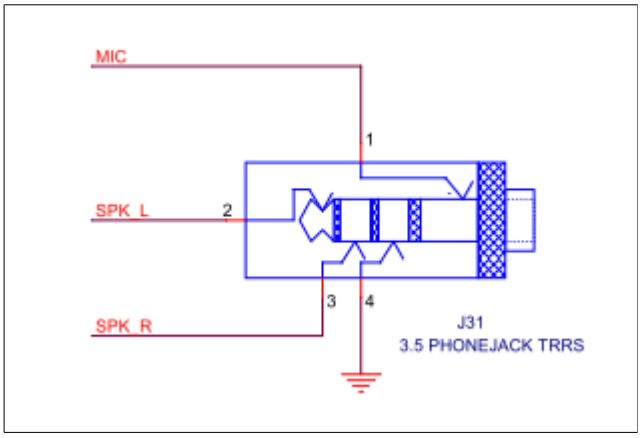

J33 TTL LCD CONNECTOR :

Part number TSM-120-01-T-DV Samtec

DESCRIPTION	Name	PIN	PIN	Name	DESCRIPTION
3,3V POWER SUPPLY	3V3 LCD	1	2	5V LCD	5V POWER SUPPLY
DATA 0, BUS LCD	LCD_D0	3	4	DIM	PWM backlight (dimming)
DATA 1, BUS LCD	LCD_D1	5	6	LCD_D14	DATA 14, BUS LCD
DATA 2, BUS LCD	LCD_D2	7	8	LCD_D15	DATA 15, BUS LCD
DATA 3, BUS LCD	LCD_D3	9	10	LCD_D16	DATA 16, BUS LCD
DATA 4, BUS LCD	LCD_D4	11	12	LCD_D17	DATA 17, BUS LCD
DATA5, BUS LCD	LCD_D5	13	14	LCD_D18	DATA 18, BUS LCD
DATA 6, BUS LCD	LCD_D6	15	16	LCD_D19	DATA 19, BUS LCD
DATA 7, BUS LCD	LCD_D7	17	18	LCD_D20	DATA 20, BUS LCD
DATA 8, BUS LCD	LCD_D8	19	20	LCD_D21	DATA 21, BUS LCD
DATA9, BUS LCD	LCD_D9	21	22	LCD_D22	DATA 22, BUS LCD
DATA 10, BUS LCD	LCD_D10	23	24	LCD_D23	DATA 23, BUS LCD
DATA 11, BUS LCD	LCD_D11	25	26	LCD_EN	Enable, LCD
DATA 12, BUS LCD	LCD_D12	27	28	LCD_VSYNC	Vertical Sync, LCD
DATA 13, BUS LCD	LCD_D13	29	30	LCD_HSYNC	Horizontal sync, LCD
Bottom, Touch Screen	TOUCH_TSMY	31	32	LCD_VCLK	Clock, LCD
Top, Touch Screen	TOUCH_TSPY	33	34	N.C.	Not Connected
Left, Touch Screen	TOUCH_TSMX	35	36	BCK_LIGHT_P	Output backlight +, LCD
Right, Touch Screen	TOUCH_TSPX	37	38	BCK_LIGHT_N	Output backlight -, LCD
Board Ground	GND	39	40	GND	Board Ground

J34 ARM JTAG :

Part number T821120A1S100CEU Amphenol

DESCRIPTION	Name	PIN	PIN	Name	DESCRIPTION
3,3V POWER SUPPLY	VCC	1	2	VCC	3,3V POWER SUPPLY
Signal TRST	TRST	3	4	GND	Board Ground
Signal TDI	TDI	5	6	GND	Board Ground
Signal TMS	TMS	7	8	GND	Board Ground
Signal TCLK	TCLK	9	10	GND	Board Ground
Signal RCLK	RCLK	11	12	GND	Board Ground
Signal TDO	TDO	13	14	GND	Board Ground
Signal RST	RST	15	16	GND	Board Ground
Not Connected	NC	17	18	GND	Board Ground
Not Connected	NC	19	20	GND	Board Ground

J35 I2C and SPI :

Part number TSM-105-01-T-DV Samtec

DESCRIPTION	Name	PIN	PIN	Name	DESCRIPTION
3,3V POWER SUPPLY	VCC	1	2	VCC	3,3V POWER SUPPLY
Signal SDA, I2C	SDA	3	4	CS	Signal CS, SPI
Signal SCL, I2C	SCL	5	6	MISO	Signal MISO,
Board Ground	GND	7	8	MOSI	Signal MOSI,
Board Ground	GND	9	10	CLK	Signal CLK,

J38 Isolate I/O connector :

Part number 610114249221 Wurth

DESCRIPTION	Name	PIN	PIN	Name	DESCRIPTION
IN optoisolated 1	IN OPTO 1	1	2	IN OPTO 2	IN optoisolated 2
Isolated Ground	GND ISO	3	4	GND ISO	Isolated Ground
Isolated Ground	GND ISO	5	6	GND ISO	Isolated Ground
OUT NC relè 1	NC 1	7	8	NC 1	OUT NC relè 2
OUT NO relè 1	NO 1	9	10	NO 2	OUT NO relè 2
OUT COM relè 1	COM 1	11	12	COM 2	OUT COM relè 2
Isolated Ground	GND ISO	13	14	GND ISO	Isolated Ground

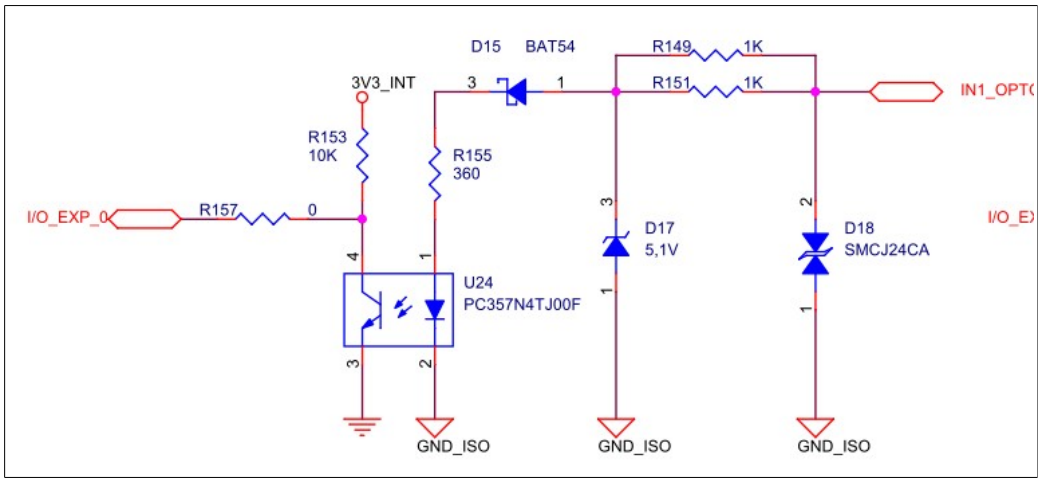

Input isoleted circuit

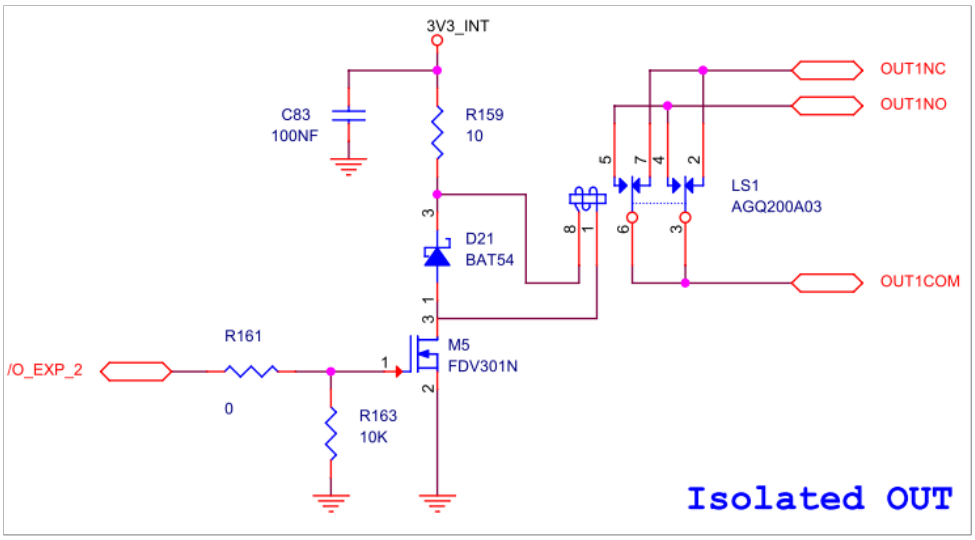

J39 Generic I/O connector :

Part number 610114249221 Wurth

DESCRIPTION	Name	PIN	PIN	Name	DESCRIPTION
3,3V POWER SUPPLY	3V3	1	2	IO_EXP_14	IO Expander GPIO 14
Analog input 3V3	AIN4	3	4	IO_EXP_15	IO Expander GPIO 15
Analog input 3V3	AIN5	5	6	IO_EXP_16	IO Expander GPIO 16
Analog input 3V3	AIN6	7	8	IO_EXP_17	IO Expander GPIO 17
Analog input 3V3	AIN7	9	10	IO_EXP_18	IO Expander GPIO 18
GPIO 3V3	GPIO	11	12	IO_EXP_19	IO Expander GPIO 19
Board Ground	GND	13	14	IO_EXP_20	IO Expander GPIO 20

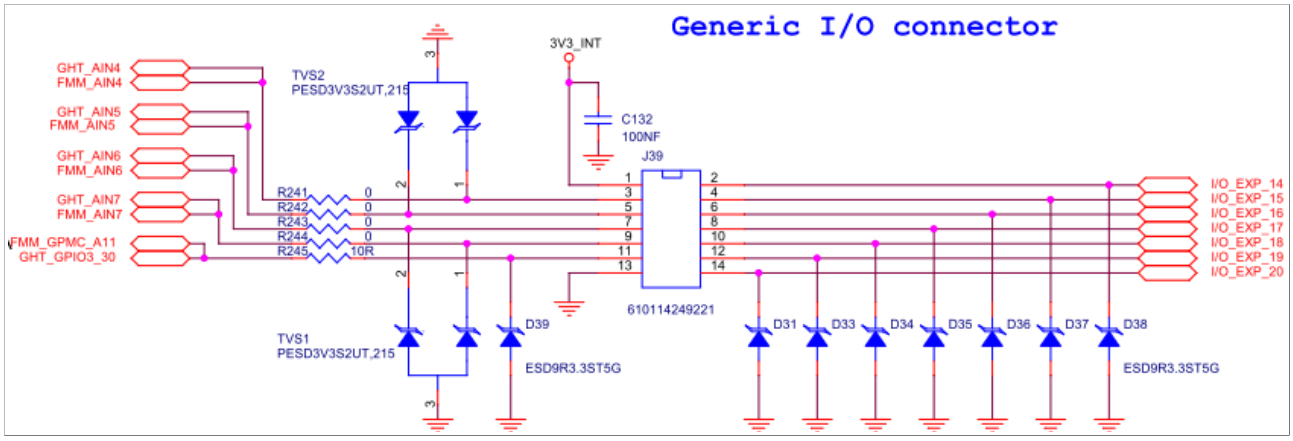

Input circuit

I2C peripherals

Telica has a series of I2C peripherals that are listed below:

I2C Peripheral	Address	Function
I2C I/O Expander	23h	I/O expander
RTC	51h	Real time clock
INA 1	40h	3,3V current measurement
INA 2	41h	5V current measurement

I2C I/O Expander

Telica has a I2C I/O expander that provides the I/O control of alla of the peripherals in the board that require a GPIO. The component that is used is the TCA6424A. For more informations about this device please follow the following link:

http://www.ti.com/lit/ds/symlink/tca6424a.pdf

I2C Expander IO	Function	Notes
IO_EXP_0	Input opto isolated	See schematic page 11
IO_EXP_1	Input opto isolated	See schematic page 11
IO_EXP_2	Output Rele	See schematic page 11
IO_EXP_3	Output Rele	See schematic page 11
IO_EXP_4	GSM_GPIO	GPIO from GSM module
IO_EXP_5	GSM_PWR_ON#	Low to High to Power the GSM module
IO_EXP_6	GSM_RST#	Active low rest for GSM Module
IO_EXP_7	EN_GSM_PWR#	Active low GSM Power supply enable
IO_EXP_8	USB Host Selection (schematics page 12)	USB selection for routing the USB HOST to the GSM Module J29 or to the connector J8. **Low** selects connector (default); **High** selects the GSM connector.
IO_EXP_9	Audio Out Mux Control (schematics page 13)	**Low** selects CPU audio to output (default); **High** selects GSM audio to output.

I2C Expander IO	Function	Notes
IO_EXP_10	Audio IN Mux Control (schematics page 13)	**Low** selects CPU audio to input (default); **High** selects the GSM audio to input.
IO_EXP_11	Power amplifier Gain 0 (schematics page 13)	GAIN 0 / GAIN 1 / Power Output Low / Low / 6dB(def) High / Low / 12dB Low / High / 18dB High / High / 24dB
IO_EXP_12	Power amplifier Gain 1 (schematics page 13)	
IO_EXP_13	Audio Shut Down	**Low** shut down amplifier (Def) **High** enables amplifier
IO_EXP_14	Generig GPIO on J39	See schematic page 14
IO_EXP_15	Generig GPIO on J39	See schematic page 14
IO_EXP_16	Generig GPIO on J39	See schematic page 14
IO_EXP_17	Generig GPIO on J39	See schematic page 14
IO_EXP_18	Generig GPIO on J39	See schematic page 14
IO_EXP_19	Generig GPIO on J39	See schematic page 14
IO_EXP_20	Generig GPIO on J39	See schematic page 14
IO_EXP_21	User RED LED	Active low
IO_EXP_22	User bicolor GREEN LED	Active low
IO_EXP_23	User bicolor Yellow LED	Active low

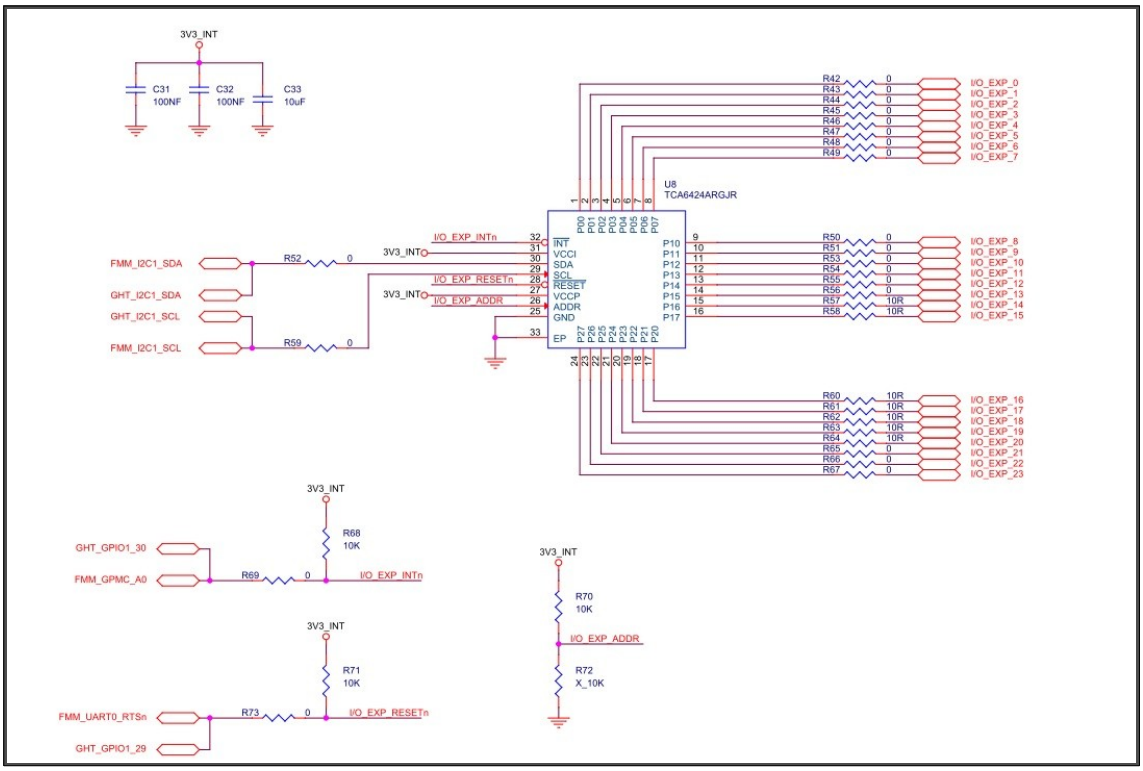

Telica's LED

USER LED

Telica has 3 user leds, they are driven through the GPIO_EXP_21, GPIO_EXP_22, GPIO_EXP_23.

They are located near the RJ45 connector:

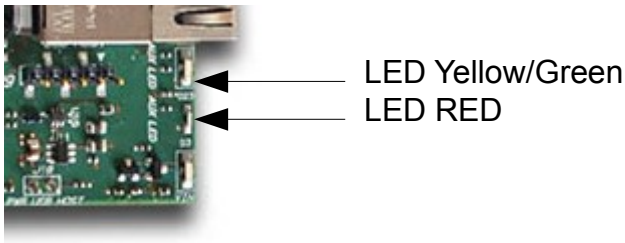

GPIO	Function	Comment
IO_EXP_21	User RED LED	Active low
IO_EXP_22	User bicolor GREEN LED	Active low
IO_EXP_23	User bicolor Yellow LED	Active low

Power LED

Power Led for the precense of the VIN power supply.

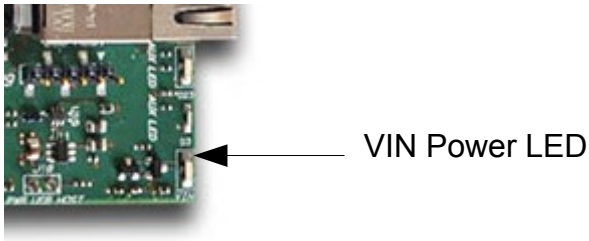

CPLD User Led

Telica has a CPLD for available for the user. The Led associated is locaded near the CPU module.

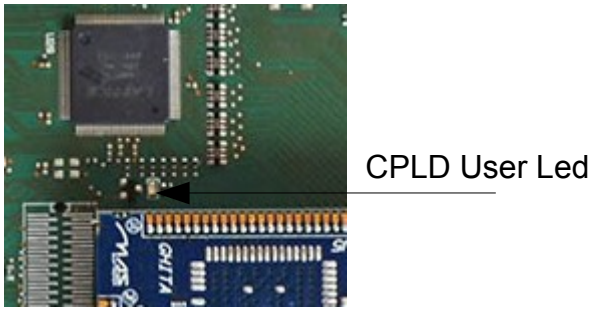

For more informations about the use of the CPLD contact the support@maselettronica.com

USB Select Led

Telica has a Led for that indicates the selection of the USB Host interface:

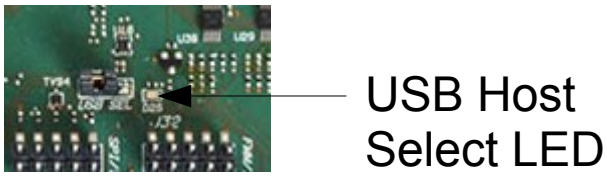

Schematics

Rohs compliance

Telica Carrier comply with the European Union's Directive 2002/95/EC: "Restrictions of Hazardous Substances".

Warranty Terms

MAS Elettronica guarantees hardware products against defects in workmanship and material for a period of one (1) year from the date of shipment. Your sole remedy and MAS Elettronica's sole liability shall be for MAS Elettronica, at its sole discretion, to either repair or replace the defective hardware product at no charge or to refund the purchase price. Shipment costs in both directions are the responsibility of the customer. This warranty is void if the hardware product has been altered or damaged by accident, misuse or abuse.

Disclaimer of Warranty
THIS WARRANTY IS MADE IN LIEU OF ANY OTHER WARRANTY, WHETHER EXPRESSED, OR IMPLIED, OF MERCHANTABILITY, FITNESS FOR A SPECIFIC PURPOSE, NON-INFRINGEMENT OR THEIR EQUIVALENTS UNDER THE LAWS OF ANY JURISDICTION, EXCEPT THE WARRANTY EXPRESSLY STATED HEREIN. THE REMEDIES SET FORTH HEREIN SHALL BE THE SOLE AND EXCLUSIVE REMEDIES OF ANY PURCHASER WITH RESPECT TO ANY DEFECTIVE PRODUCT.
Limitation on Liability
UNDER NO CIRCUMSTANCES SHALL MAS ELETTRONICA BE LIABLE FOR ANY LOSS, DAMAGE OR EXPENSE SUFFERED OR INCURRED WITH RESPECT TO ANY DEFECTIVE PRODUCT. IN NO EVENT SHALL MAS ELETTRONICA BE LIABLE FOR ANY INCIDENTAL OR CONSEQUENTIAL DAMAGES THAT YOU MAY SUFFER DIRECTLY OR INDIRECTLY FROM USE OF ANY PRODUCT.

Contact Informations

Headquarters

Mas Elettronica Sas
Via Rossi 1
35030 Rubano (PD)
Italy.
Tel +39 0498687469
Fax +39 0498687469

Sales : sm@maselettronica.com
Support: support@maselettronica.com